Akkermans Industrial Engineering B.V. info@aiebv.com T +31 (0)165 - 224140

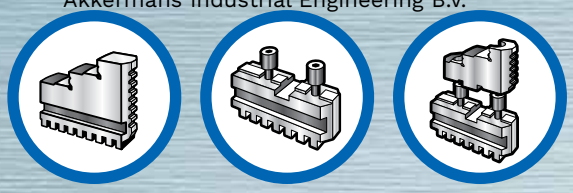

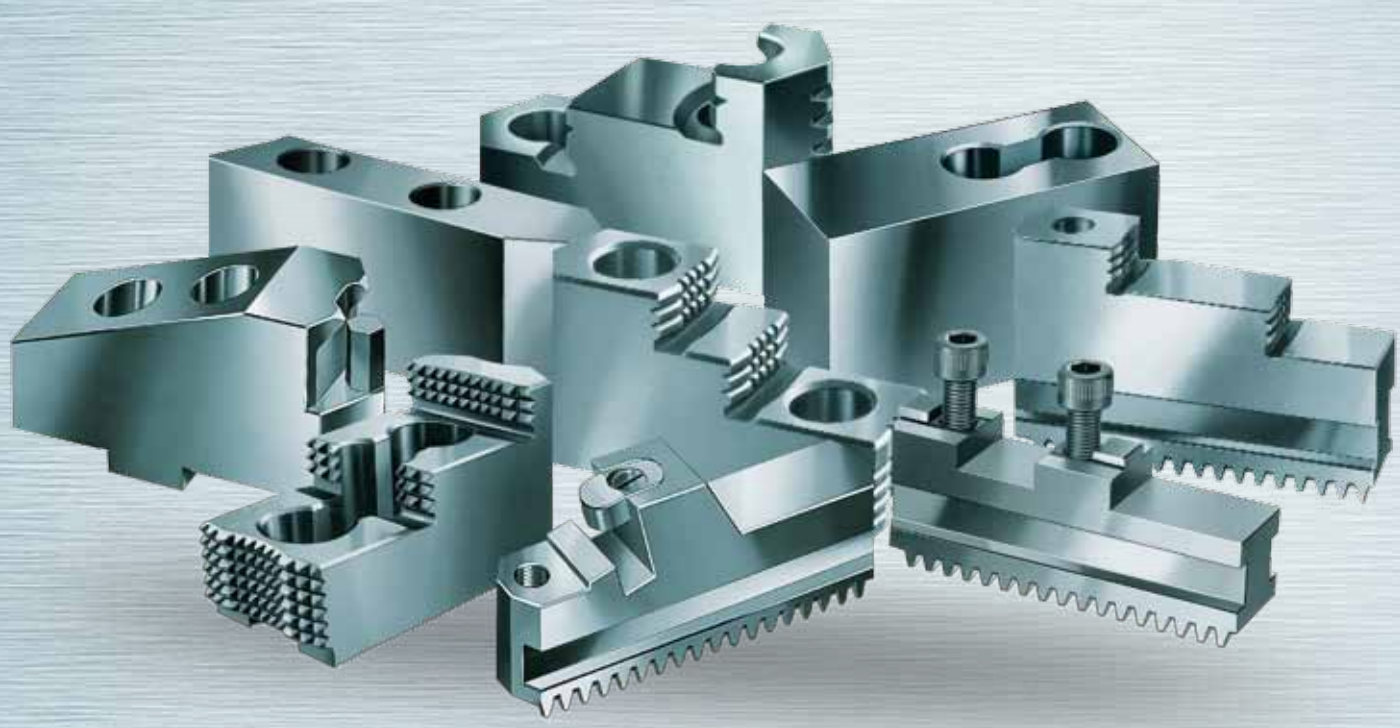

Clamping jaws catalogue

www.jawfinder.biz

ROHM

driven by technology

DRILL CHUCKS - NC-TOOLING

LIVE CENTERS - FACE DRIVERS

LATHE CHUCKS - INDEPENDENT CHUCKS

VICES

AUTOMATION TECHNOLOGY

POWER CHUCKS - CYLINDERS - STEADY RESTS

MANDRELS

TOOL CLAMPING SYSTEMS

Table of contents

RÖHM

Soft top jaws, serration 90° 4
Soft top jaws, without mounting holes, serration 90° 5
Soft top jaws, serration 60° 6
Soft top jaws, tongue and groove, 120° bevelled 8
Soft top jaws, tongue and groove, for key bar chucks 9
Reversible top jaws, hardened, serration 90° 10
Reversible top jaws, hardened, serration 60° 11
Reversible top jaws, hardened, tongue and groove 13
Base jaws GB, hardened, diagonally toothing 14
Soft one-piece jaws BL, diagonally toothing 15
One-piece reversible jaws EB, hardened, diagonally toothing 16
Draw-down jaws NB, diagonally toothing 17
Interchangeable clamping inserts 17
Base jaws GBG, hardened, straight toothing 19
Soft one-piece jaws BLG, straight toothing 20
One-piece reversible jaws EBG, hardened, straight toothing 21
Draw-down jaws NBG, straight toothing 22
Interchangeable clamping inserts 22
Claw-type jaws, hardened, serration 90° 24
Claw-type jaws, hardened, serration 60° 28
Claw-type jaws, hardened, tongue and groove 29
Soft segment top jaws, serration 90° 30
Soft segment top jaws, serration 60° 31
T-nuts for power chucks and stationary power chucks 32
Mounting bolts for top jaws 34
Outward stepped jaw BB, hardened 36
Inward stepped jaws DB, hardened 37
Unstepped jaws BL, can be hardened 38
Base jaws GB, hardened 39
Reversible top jaws UB, hardened 40
Soft top jaws AB 41
Block jaws in extended design 42
Block jaws in heightened design 43
Soft top jaws in extended design 44
Soft top in heightened design 45
Soft top in heightened and wide design 46
Reversible top jaws UB, hardened for EG-ES 47
Unstepped jaws BL, can be hardened for EG-ES 48
Base jaws GB, hardened for EG-ES 49

Schunk

Soft top jaws, serration 90° 52
Soft top jaws, without mounting holes, serration 90° 53
Soft top jaws, serration 60° 54
Soft top jaws, tongue and groove, 120° bevelled 56
Soft top jaws, tongue and groove, for key bar chucks 57
Reversible top jaws, hardened, serration 60° 58
Reversible top jaws, hardened, tongue and groove 59
Base jaws GB, hardened, diagonally toothing 60
Soft one-piece jaws BL, diagonally toothing 61
One-piece reversible jaws EB, hardened, diagonally toothing 62
Draw-down jaws NB, diagonally toothing 63
Base jaws GBG, hardened, straight toothing 65
Soft one-piece jaws BLG, straight toothing 66
One-piece reversible jaws EBG, hardened, straight toothing 67
Draw-down jaws NBG, straight toothing 68
Claw-type jaws, hardened, serration 90° 70
Claw-type jaws, hardened, serration 60° 71
Claw-type jaws, hardened, tongue and groove 72
Soft segment top jaws, serration 60° 73

SMW-Autoblok

Soft top jaws, serration 90° 76
Soft top jaws, without mounting holes, serration 90° 77
Soft top jaws, serration 60° 78
Soft top jaws, tongue and groove, for key bar chucks 80
Reversible top jaws, hardened, serration 90° 81
Reversible top jaws, hardened, serration 60° 82
Reversible top jaws, hardened, tongue and groove 84
Base jaws GB, hardened, diagonally toothing 85
Soft one-piece jaws BL, diagonally toothing 86
One-piece reversible jaws EB, hardened, diagonally toothing 87
Draw-down jaws NB, diagonally toothing 88
Base jaws GB, hardened, diagonally toothing 90
Soft one-piece jaws BLG, straight toothing 91
One-piece reversible jaws EBG, hardened, straight toothing 92
Draw-down jaws NBG, straight toothing 93
Claw-type jaws, hardened, serration 90° 95
Claw-type jaws, hardened, serration 60° 96
Claw-type jaws, hardened, tongue and groove 97

Forkardt

Soft top jaws, serration 90° 100
Soft top jaws, without mounting holes, serration 90° 101
Soft top jaws, tongue and groove, 120° bevelled 102
Soft top jaws, tongue and groove, for key bar chucks 103
Reversible top jaws, hardened, serration 90° 104
Reversible top jaws, hardened, tongue and groove 105
Base jaws GB, hardened, diagonally toothing 106
Soft one-piece jaws BL, diagonally toothing 107
One-piece reversible jaws EB, hardened, diagonally toothing 108
Draw-down jaws NB, diagonally toothing 109
Claw-type jaws, hardened, serration 90° 111
Claw-type jaws, hardened, tongue and groove 112
Soft segment top jaws, serration 90° 113

Bison

Soft top jaws, serration 90° 116
Soft top jaws, without mounting holes, serration 90° 117
Soft top jaws, serration 60° 118
Soft top jaws, tongue and groove, 120° bevelled 119
Reversible top jaws, hardened, serration 90° 120
Reversible top jaws, hardened, serration 60° 121
Claw-type jaws, hardened, serration 90° 122
Claw-type jaws, hardened, serration 60° 123

Kitagawa

Soft top jaws, serration 60° 126
Reversible top jaws, hardened, serration 60° 127
Claw-type jaws, hardened, serration 60° 128
Soft segment top jaws, serration 60° 129

RÖHM Accessories

Jaw cutting attachment BAV, for 3-jaw chucks 132
Checklist for special jaws 134

Find your clamping jaw quickly and simply at www.jawfinder.biz

The comprehensive clamping jaw program offers a large number of the most diverse jaw types for all clamping options. Suitable for manual lathe chucks, independent chucks and power chucks from different manufacturers both in industrial and artisan production.

Find your clamping jaw quickly and simply at www.jawfinder.biz

RÖHM

Soft top jaws, serration 90° 4
Soft top jaws, without mounting holes, serration 90° 5
Soft top jaws, serration 60° 6
Soft top jaws, tongue and groove, 120° bevelled 8
Soft top jaws, tongue and groove, for key bar chucks 9
Reversible top jaws, hardened, serration 90° 10
Reversible top jaws, hardened, serration 60° 11
Reversible top jaws, hardened, tongue and groove 13
Base jaws GB, hardened, diagonally toothing 14
Soft one-piece jaws BL, diagonally toothing 15
One-piece reversible jaws EB, hardened, diagonally toothing 16
Draw-down jaws NB, diagonally toothing 17
Interchangeable clamping inserts 17
Base jaws GBG, hardened, straight toothing 19
Soft one-piece jaws BLG, straight toothing 20
One-piece reversible jaws EBG, hardened, straight toothing 21
Draw-down jaws NBG, straight toothing 22
Interchangeable clamping inserts 22
Claw-type jaws, hardened, serration 90° 24
Claw-type jaws, hardened, serration 60° 28
Claw-type jaws, hardened, tongue and groove 29
Soft segment top jaws, serration 90° 30
Soft segment top jaws, serration 60° 31
T-nuts for power chucks and stationary power chucks 32
Mounting bolts for top jaws 34

Clamping jaws for geared scroll chucks

Outward stepped jaw (inside jaw) BB, hardened 36
Inward stepped jaws (outside jaws) DB, hardened 37
Unstepped jaws (soft block jaws) BL, can be hardened 38
Base jaws GB, hardened 39
Reversible top jaws UB, hardened 40
Soft top jaws AB 41
Block jaws in extended design 42
Block jaws in heightened design 43
Top jaws in extended design, can be hardened 44
Top jaws in heightened design, can be hardened 45
Top jaws in heightened and wide design, can be hardened 46
Reversible top jaws UB, hardened for EG-ES 47
Unstepped jaws BL, can be hardened for EG-ES 48
Base jaws GB, hardened for EG-ES 49

Errors and corrections are reserved!

Soft top jaws, serration 90°

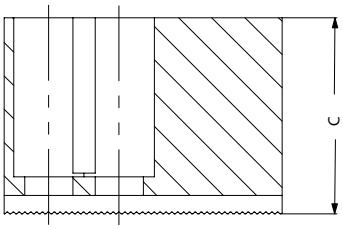

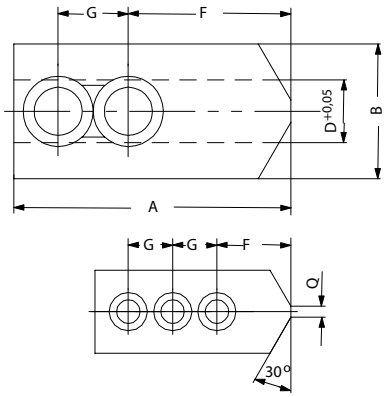

Tool group C 21
Type 543/538 **Soft top jaws, set, can be hardened, serration 90°** - material: 16 MnCr 5

Chuck Type	2-jaw set	3-jaw set	4-jaw set	Jaw length A	Jaw width B	Jaw height C	D	F	G	Q	Serration	Weight approx. kg
KFD-HS 110/3	**149690** ●	**149353** ●	-	45	26,5	38	10	15	15	5	1/16"x 90°	0,21
KFD 110/3; KFD 125/3; KFD 140/3; KFD-HS 130/3; KFD-HS 140/3	**045794** ●	**046402** ●	**046450** ●	53	22,5	30	10	20	12	3	1/16"x 90°	0,223
KFD-HE 130/3	-	**156452** ●	-	54	23	29	10	28	14	5	1/16"x 90°	0,22
KFD 130/3; KFD-HE 170/3; KFD-HS 160/3; KFD-HS 175/3; LVE 125/3; LVE 160/3; SSH 160/3; SSP 160/3	**045795** ●	**046403** ●	**046451** ●	55	26,5	38	12	31	15	-	1/16"x 90°	0,32
DURO-NCGB 200/3; DURO-NCSE-B 210/3; KFD 160/3; KFD-AF 160/3; KFD-HS 200/3	**133147** ●	**133152** ●	**133157** ●	66,7	36,5	53	17	36	19	-	1/16"x 90°	0,7
KFD 200/3; KFD 250/3; KFD-AF 200/3; KFD-EC 200/3; KFD-F-EC 200/3; KFD-HE 210/3; KFD-HS 250/3; KFL 250/3; LVE 200/3; SSH 200/3; SSP 200/3	**133148** ●	**133153** ●	**133158** ●	75	36,5	53	17	44	19	-	1/16"x 90°	0,88
KFD-AF 200/3; LVE 200/3; SSP 200/3	-	**461712** ●	-	75	36,5	65	17	44	19	-	1/16"x90°	3,4
	-	**585021** ■	-	90	36,5	40	17	47	23	5	1/16"x90°	2,7
	-	**894365** ●	-	90	40	60	17	43	22	5	1/16"x90°	4,2
	-	**894357** ■	-	98	35	40	17	61	22	-	1/16"x90°	2,9
DURO-NCGB 250/3; DURO-NCGB 315/3; DURO-NCSE-B 265/3; DURO-NCSE-B 315/3; KFD 250/3; KFD-AF 250/3; KFD-EC 250/3; KFD-F-EC 250/3; KFD-HE 254/3; KFD-HE 315/3; KFD-HS 315/3; KFL 315/3; LVE 250/3; LVE 315/3; SSH 250/3; SSH 315/3; SSP 250/3; SSP 315/3	**133149** ●	**133154** ●	**133159** ●	95	45	54,5	21	55	25	-	1/16"x 90°	1,4
KFD-AF 250/3; KFD-AF 315/3	-	**585531** ●	-	110	50	55,5	21	60	30	-	1/16"x90°	6,3
KFD 315/3; KFD-AF 315/3; KFD-EC 315/3; KFD-F-EC 315/3; KFL 400/3	**133150** ●	**133155** ●	**133160** ●	103	50	80	21	62	25	-	1/16"x 90°	2,58
KFD-AF 250/3; KFD-AF 315/3	-	**894366** ●	-	120	50	80	21	62	28	-	1/16"x90°	8,9
DURO-NCGB 400/3; DURO-NCGB 500/3; DURO-NCGB 630/3; DURO-NCSE-B 400/3; DURO-NCSE-B 500/3; DURO-NCSE-B 630/3; KFD 400/3; KFD 500/3; KFD 630/3; KFD 800/3; KFD-EC 400/3; KFD-F-EC 400/3; KFD-HE 400/3; KFD-HS 400/3; KFD-HS 500/3; KFL 500/3; KFL 600/3; LVE 400/3; LVE 500/3; LVE 600/3	**133151** ●	**133156** ●	**133161** ●	130	50	80	25,5	79	31	-	3/32"x 90°	3,1
LVE 400/3; LVE 500/3; LVE 600/3	-	**118004** ■	-	130	50	80	25,5	20	35	-	3/32"x90°	3,1
KFD 1000/3; KFD 1250/3; KFD 1400/3; KFD 1600/3	-	**152790** ■	**461716** ■	200	80	89	30	94	42	-	m=2	8,5
LVE 600/3; LVE 700/3	-	**169450** ●	-	215	68	89	30	25	45+45	-	3/32"x90°	7,8
LVE 1000/3; LVE 600/3; LVE 700/3; LVE 800/3	-	**169452** ●	-	245	68	89	30	25	45+45	-	3/32"x90°	9,1

● from stock ■ within 4 weeks

Soft top jaws, without mounting holes, serration 90°

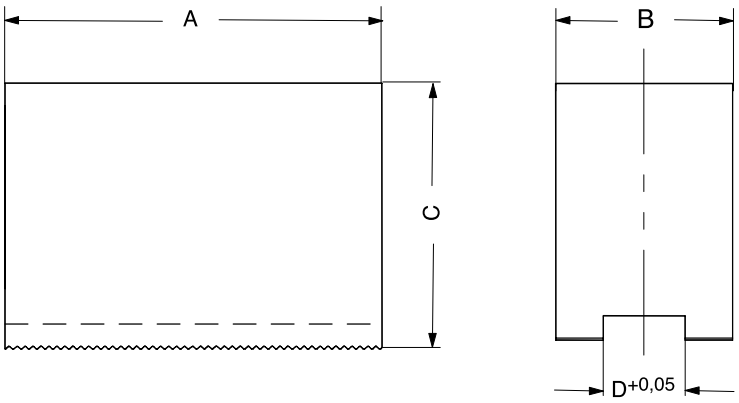

Tool group C 21
Type 543-28 **Soft top jaws, piece, without mounting holes, can be hardened, serration 90°** - material: 16 MnCr 5

Chuck Type	Item no.	Jaw length A	Jaw width B	Jaw height C	D	Serration	Weight approx. kg
KFD 110/3; KFD 125/2; KFD 125/3; KFD 130/3; KFD 140/2; KFD-HE 130/3; KFD-HS 110/3; KFD-HS 130/3; KFD-HS 140/3	**883005** ●	52	26,5	38	10	1/16"x90°	0,4
KFD 130/2; KFD 130/3; KFD-HE 170/3; KFD-HS 160/2; KFD-HS 160/3; KFD-HS 160/4; KFD-HS 175/3; LVE 125/3; LVE 160/3; SSH 160/2; SSH 160/3; SSP 160/2; SSP 160/3	**631327** ●	55	26,5	38	12	1/16"x90°	0,4
KFD 160/2; KFD 160/3; KFD 160/4; KFD-AF 160/3; KFD-HE 210/3; KFD-HS 200/2; KFD-HS 200/3; KFD-HS 200/4; LVE 200/3	**667392** ■	90	36,5	53	17	1/16"x90°	1,3
KFD 160/2; KFD 160/3; KFD 160/4; KFD 200/2; KFD 200/3; KFD 200/4; KFD-AF 160/3; KFD-AF 200/3; KFD-EC 200/3; KFD-HE 210/3; KFD-HS 200/2; KFD-HS 200/3; KFD-HS 200/4; KFD-HS 250/2; KFD-HS 250/3; KFD-HS 250/4; KFL 250/3; LVE 200/3; SSH 200/2; SSH 200/3; SSP 200/2; SSP 200/3	**155423** ■	105	36,5	53	17	1/16"x90°	1,5
	681620 ■	120	36,5	53	17	1/16"x90°	1,7
KFD 160/2; KFD 160/3; KFD 160/4; KFD-AF 160/3; KFD-HE 210/3; KFD-HS 200/2; KFD-HS 200/3; KFD-HS 200/4; LVE 200/3	**155424**	90	45	54,5	17	1/16"x90°	1,7
KFD 160/2; KFD 160/3; KFD 160/4; KFD 200/2; KFD 200/3; KFD 200/4; KFD-AF 160/3; KFD-AF 200/3; KFD-EC 200/3; KFD-HE 210/3; KFD-HS 200/2; KFD-HS 200/3; KFD-HS 200/4; KFD-HS 250/2; KFD-HS 250/3; KFD-HS 250/4; KFL 250/3; LVE 200/3; SSH 200/2; SSH 200/3; SSP 200/2; SSP 200/3	**155425** ●	105	45	54,5	17	1/16"x90°	2
KFD 200/2; KFD 200/3; KFD 200/4; KFD-AF 200/3; KFD-EC 200/3; KFD-HE 210/3; KFD-HS 250/2; KFD-HS 250/3; KFD-HS 250/4; KFL 250/3; LVE 200/3; SSH 200/2; SSH 200/3; SSP 200/2; SSP 200/3	**155426** ■	120	45	54,5	17	1/16"x90°	2,2
	155427 ●	90	50	80	17	1/16"x90°	2,6
KFD 250/2; KFD 250/3; KFD 250/4; KFD 315/2; KFD 315/3; KFD 315/4; KFD-AF 250/3; KFD-AF 315/3; KFD-EC 250/3; KFD-EC 315/3; KFD-G 200/2; KFD-HE 254/3; KFD-HE 315/3; KFD-HS 315/2; KFD-HS 315/3; KFL 315/3; KFL 400/3; LVE 250/3; LVE 315/3; SSH 250/2; SSH 250/3; SSH 315/2; SSH 315/3; SSP 250/2; SSP 250/3; SSP 315/3	**155428** ●	120	45	54,5	21	1/16"x90°	2,2
KFD 250/2; KFD 250/3; KFD 250/4; KFD 315/2; KFD 315/3; KFD 315/4; KFD-AF 250/3; KFD-AF 315/3; KFD-EC 250/3; KFD-EC 315/3; KFD-G 200/2; KFD-HE 254/3; KFD-HE 315/3; KFD-HS 315/2; KFD-HS 315/3; KFL 315/3; KFL 400/3; LVE 250/3; LVE 315/3; SSH 250/2; SSH 250/3; SSH 315/2; SSH 315/3; SSP 250/2; SSP 250/3; SSP 315/2; SSP 315/3	**155429** ■	150	45	54,5	21	1/16"x90°	2,7
	667208 ■	120	50	80	21	1/16"x90°	3,5
	155430 ●	150	50	80	21	1/16"x90°	4,4
KFD 400/2; KFD 400/3; KFD 400/4; KFD 500/2; KFD 500/3; KFD 500/4; KFD 630/2; KFD 630/3; KFD 630/4; KFD 800/3; KFD 800/4; KFD-G 250/2; KFD-G 315/2; KFD-G 400/2; KFD-HE 400/3; KFD-HS 400/3; KFD-HS 500/3; KFL 500/3; KFL 600/3; LVE 400/3; LVE 500/3; LVE 600/3	**155431** ■	155	50	80	25,5	1/16"x90°	4,4
	155432 ●	155	68	89	25,5	1/16"x90°	7
	155433 ●	155	68	89	25,5	1/16"x90°	8,7

Soft top jaws, serration 60°

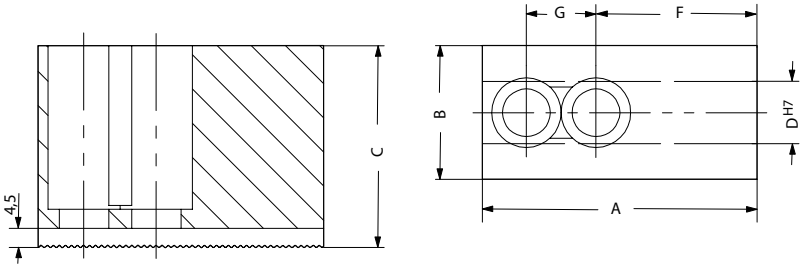

Tool group C 21
Type 543-32 **Soft top jaws, 3-jaw set, can be hardened, serration 60°** - material: 16 MnCr 5

Chuck Type	3-jaw set	Jaw length A	Jaw width B	Jaw height C	D	F	G	Serration	Weight approx. kg
KFD-HE 130/3; KFD-HE 170/3	**154863** ●	54	23	29	10	28	14	1,5 x 60°	0,25
KFD-HE 170/3	**154865** ●	72	30,5	43	12	37	20	1,5 x 60°	0,5
KFD-HE 210/3	**154867** ●	95	35	45,5	14	46	25	1,5 x 60°	0,9
	159780 ■	95	35	45,5	17	46	25	1,5 x 60°	2,7
KFD-HE 254/3	**154869** ●	110	50	45	16	50	30	1,5 x 60°	1,7
KFD-HE 315/3	**154871** ●	130	50	55,5	21	52	30	1,5 x 60°	1,9

● from stock ■ within 4 weeks

Soft top jaws, serration 60°

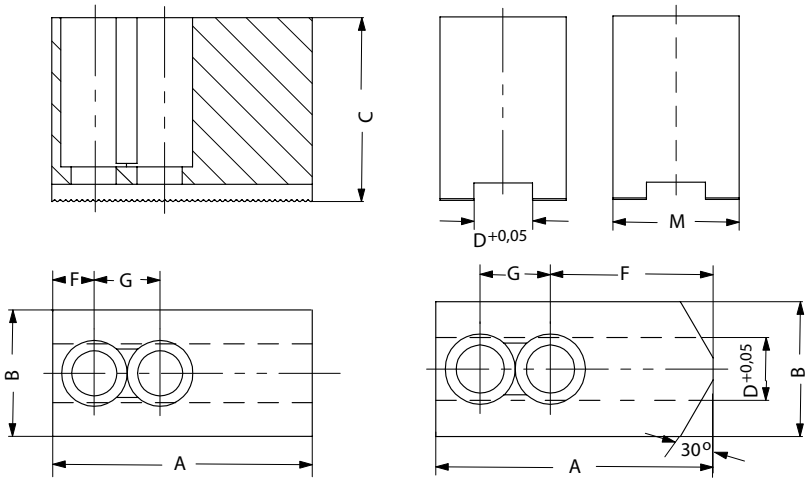

Tool group C 21
Type 530 **Soft top jaws, set, can be hardened, serration 60°** - material: 16 MnCr 5

Chuck Type	2-jaw set	3-jaw set	Jaw length A	Jaw width B	Jaw height C	D	F	G	M	Serration	Weight approx. kg
KFM 130/3	**045797** ●	**046405** ●	53	26,5	38	11	29	15	-	1,5 x 60°	0,32
KFG 160/3	-	**351102**[1] ■	66,7	30,5	43	11	-	-	27	1,5x60°	1,6
KFE 170/3; KFG 160/3; KFM 160/3	**046430** ●	**046409** ●	66,7	30,5	43	11	30	20	27	1,5 x 60°	0,55
KFE 215/3; KFG 215/3; KFM 215/3	**046432** ●	**046411** ●	88,9	36,5	53	14	45	26	34	1,5 x 60°	1,125
KFE 280/3; KFG 280/3; KFM 280/3	**046436** ●	**046415** ●	88,9	45	54,5	20	45	26	-	1,5 x 60°	1,4
KFE 350/3; KFG 350/3; KFM 350/3	**046442** ●	**046421** ●	120	50	80	21	67	28	-	1,5 x 60°	3,125

1) without mounting holes

Soft top jaws, tongue and groove, 120° bevelled

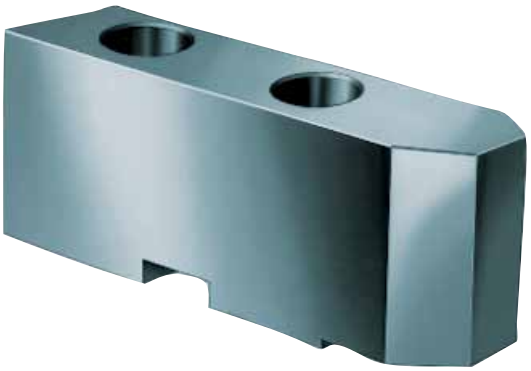

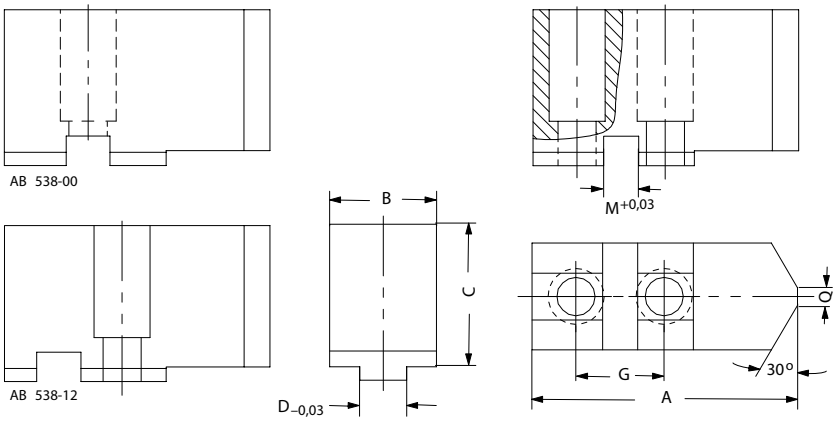

Tool group C 21
Type 549/538 **Soft top jaws, set, can be hardened, tongue and groove 120° bevelled,** material: 16 MnCr 5

Chuck Type	2-jaw set	3-jaw set	Jaw length A	Jaw width B	Jaw height C	D	F	G	M	Q	Weight approx. kg
KFD 85/3	**119458** ●	**119459** ●	40	22,5	30	8	29	-	8	3	0,146
KFD 110/3; KFD 125/3	**046860** ●	**046859** ●	51	22,5	30	8	29,5	15	8	3	0,2
KFD-HS 110/3	**-**	**144082** ●	53	22,5	30	10	26,5	17	10	3	0,21
KFD 130/3; KFD 140/3; KFD-HS 140/3	**123356** ●	**123355** ●	58	26,5	38	13	31,5	-	8	3	0,31
KFD 160/3; KFD-HS 160/3	**123359** ●	**123358** ●	72,7	36,5	53	10	32,2	25	16	3	0,72
KFD 200/3; KFD-EC 200/3; KFD-F-EC 200/3; KFD-HS 200/3; KFD-N 220/3	**123431** ●	**123430** ●	90,3	36,5	53	12	45,3	30	16	6	1
KFD 250/3; KFD-EC 250/3; KFD-F-EC 250/3; KFD-F-EC 315/3; KFD-HS 250/3; KFD-N 280/3	**123434** ●	**123433** ●	115,3	45	54,5	20	58,3	40	16	6	1,55
KFD 315/3; KFD-EC 315/3; KFD-F-EC 315/3; KFD-F-EC 400/3; KFD-N 350/3	**129847** ●	**129849** ●	146	50	80	20	63,5	50	16	6	3,6

Unstepped soft top jaws, tongue and groove, for key bar chucks

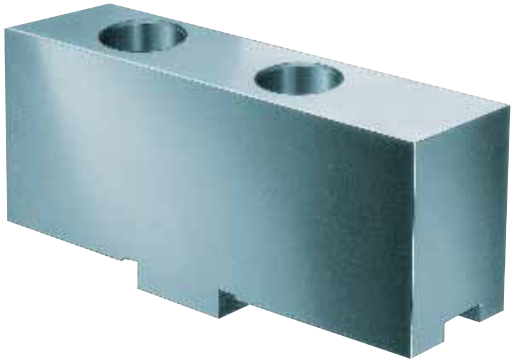

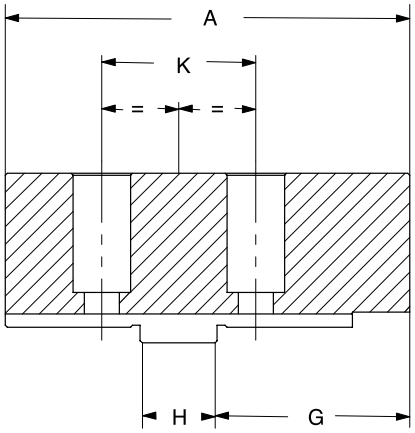

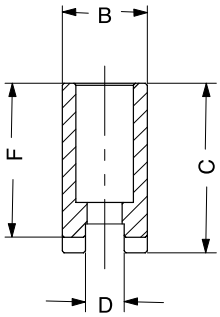

Tool group A28
Type 002 **Unstepped soft top jaw AB, 3-jaw set, standard design,** material 16MnCr5

Chuck Type	3-jaw set	Jaw length A	Jaw width B	Jaw height C	D	F	G	H	K
DURO-T 125/3	**212123** ●	55	20,7	31,3	14	25,5	25	5	20
DURO 160/3; DURO-NC 140/3; DURO-NC 175/3; DURO-NCSE 170/3; DURO-NCSE 180/3; DURO-T 160/3	**094008** ●	85	20,3	41	8	36,5	42	18	32
DURO 160/3; DURO-NC 140/3; DURO-NC 175/3; DURO-T 160/3	**137055**[1] ●	85	24,4	47	8	42,5	42	18	32
DURO 200/3; DURO-NC 200/3; DURO-NCSE 210/3; DURO-NCSE 215/3; DURO-T 200/3	**094009** ●	105	22	45	10	40	50	20	40
DURO 200/3; DURO-NC 200/3; DURO-T 200/3	**137056**[1] ●	105	34,3	56	10	51	50	20	40
DURO 250/3; DURO A 250/3; DURO-NC 250/3; DURO-NCSE 225/3; DURO-NCSE 260/3; DURO-NCSE 265/3; DURO-NCSE 315/3; DURO-T 250/3; DURO-TA 250/3	**094010** ●	125	30,4	55	12	50	70	20	40
DURO 250/3; DURO-NC 250/3; DURO-T 250/3	**137057**[1] ●	125	50,5	80	12	75	70	20	40
DURO 315/3; DURO-NC 315/3; DURO-NCSE 400/3; DURO-T 315/3	**094011** ●	145	34,3	56	12	50	74	26	54
DURO 315/3; DURO-NC 315/3; DURO-T 315/3	**137058**[1] ●	145	50,5	80	12	74	74	26	54
DURO 400/3; DURO 500/3; DURO-NC 400/3; DURO-NC 500/3; DURO-NCSE 500/3; DURO-NCSE 630/3; DURO-T 400/3; DURO-T 500/3	**094046** ●	180	50,5	80	18	73	100	30	60
DURO 630/3; DURO-NC 630/3; DURO-T 630/3	**140716** ●	260	68	110	24	102	150	40	82

1) extended design

Reversible top jaws, hardened, serration 90°

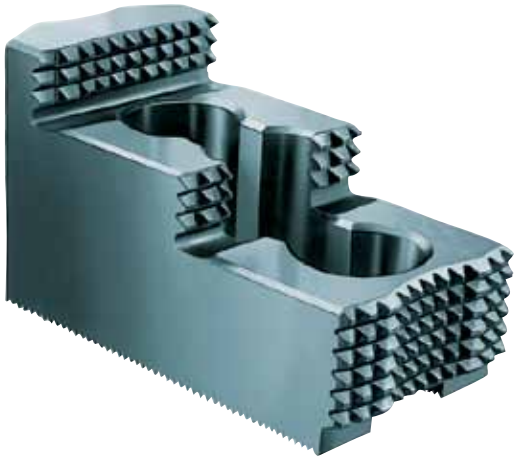

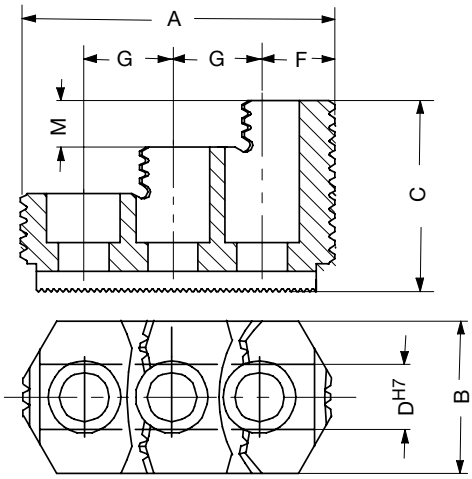

Tool group C 21
Type 543/538 **Reversible top jaws, set, hardened, serration 90°** - material: 16 MnCr 5

Chuck Type	2-jaw set	3-jaw set	4-jaw set	Jaw length A	Jaw width B	Jaw height C	D	F	G	M	Serration	Weight approx. kg
KFD-HS 110/3	**149490** ●	**149352** ●	**155395** ●	45	26	32	10	15	15	7	1/16”x 90°	0,155
KFD 110/3; KFD 125/3; KFD 140/3; KFD-HS 130/3; KFD-HS 140/3	**046545** ●	**046544** ●	**046546** ●	56	26	37,5	10	10	12	10	1/16”x 90°	0,13
KFD-HE 130/3	-	**156446** ●	-	54	23	27,5	10	13	14	10	1/16”x 90°	0,11
KFD 130/3; KFD-HE 170/3; KFD-HS 160/3; KFD-HS 175/3; LVE 125/3; LVE 160/3; SSH 160/3; SSP 160/3	-	**351320** ●	-	51,5	26	26	12	13,5	15	8	1/16”x 90°	0,15
	045796 ●	**046404** ●	**046452** ●	56	26	37,5	12	14	15	10	1/16”x 90°	0,17
DURO-NCGB 200/3; DURO-NCSE-B 210/3; KFD 160/3; KFD 200/3; KFD-AF 160/3; KFD-AF 200/3; KFD-EC 200/3; KFD-F-EC 200/3; KFD-HS 200/3; KFD-HS 250/3; KFL 250/3; LVE 200/3; SSH 200/3; SSP 200/3	**046429** ●	**046408** ●	**046456** ●	68	34,7	45	17	17	19	10	1/16”x 90°	0,35
DURO-NCSE-B 210/3; KFD 160/3; KFD 200/3; KFD 250/3; KFD-AF 160/3; KFD-AF 200/3; KFD-EC 200/3; KFD-F-EC 200/3; KFD-HE 210/3; KFD-HS 200/3; KFD-HS 250/3; KFL 250/3; LVE 200/3; SSH 200/3; SSP 200/3	**118521** ●	**118522** ●	**118523** ●	75	36	49	17	21,5	19	12	1/16”x 90°	0,46
DURO-NCSE-B 210/3; KFD 160/3; KFD 200/3; KFD-AF 160/3; KFD-AF 200/3; KFD-EC 200/3; KFD-F-EC 200/3; KFD-HS 200/3; KFD-HS 250/3; KFL 250/3; LVE 200/3; SSH 200/3; SSP 200/3	-	**609592** ■	-	80	36	37	17	41	19	12	1/16”x 90°	0,235
DURO-NCSE-B 210/3; KFD 160/3; KFD 200/3; KFD-AF 160/3; KFD-AF 200/3; KFD-EC 200/3; KFD-F-EC 200/3; KFD-HS 200/3; KFD-HS 250/3; KFL 250/3; SSH 200/3; SSP 200/3	-	**585022** ■	-	81	40	49	17	19	23	12	1/16”x90°	1,5
DURO-NCGB 250/3; DURO-NCGB 315/3; DURO-NCSE-B 265/3; DURO-NCSE-B 315/3; KFD 250/3; KFD 315/3; KFD 315/4; KFD-AF 250/3; KFD-AF 315/3; KFD-EC 250/3; KFD-EC 315/3; KFD-F-EC 250/3; KFD-F-EC 315/3; KFD-HE 254/3; KFD-HE 315/3; KFD-HS 315/3; KFL 315/3; KFL 400/3; LVE 250/3; LVE 315/3; SSH 250/3; SSH 315/3; SSP 250/3; SSP 315/3	**046435** ●	**046414** ●	**046462** ●	103,5	50	58	21	33,5	25	14	1/16”x 90°	1,13
DURO-NCSE-B 265/3; DURO-NCSE-B 315/3; KFD 250/3; KFD 315/3; KFD-AF 250/3; KFD-AF 315/3; KFD-EC 250/3; KFD-EC 315/3; KFD-HE 254/3; KFD-HE 315/3; KFD-HS 315/3; KFL 315/3; KFL 400/3; LVE 250/3; LVE 315/3	-	**585533** ■	-	104,5	44,5	54	21	25,5	30	13	1/16”x90°	3,2
DURO-NCGB 400/3; DURO-NCGB 500/3; DURO-NCGB 630/3; DURO-NCSE-B 400/3; DURO-NCSE-B 500/3; DURO-NCSE-B 630/3; KFD 400/3; KFD 500/3; KFD 630/3; KFD 800/3; KFD-EC 400/3; KFD-F-EC 400/3; KFD-HE 400/3; KFD-HS 400/3; KFD-HS 500/3; KFL 500/3; KFL 600/3; LVE 1000/3; LVE 400/3; LVE 500/3; LVE 600/3; LVE 630/3; LVE 800/3	**046447** ●	**037531** ●	**046474** ●	135	68	65	25,5	48	31+31	26	3/32”x 90°	2,4
LVE 600/3; LVE 700/3	-	**169464** ■	-	170	80	75	30	56	42+42	32	3/32”x90°	3,6
LVE 1000/3; LVE 800/3	-	**169466** ●	-	195	80	85	30	78	42+42	35	3/32”x90°	4,5
KFD 1000/3; KFD 1250/3; KFD 1400/3; KFD 1600/3	-	**152789** ■	-	200	80	85	30	78	42	13	m=2	6

Hardened jaws, supplied as supplement or as spares, must be ground on the chuck.

● from stock ■ within 4 weeks

Reversible top jaws, hardened, serration 60°

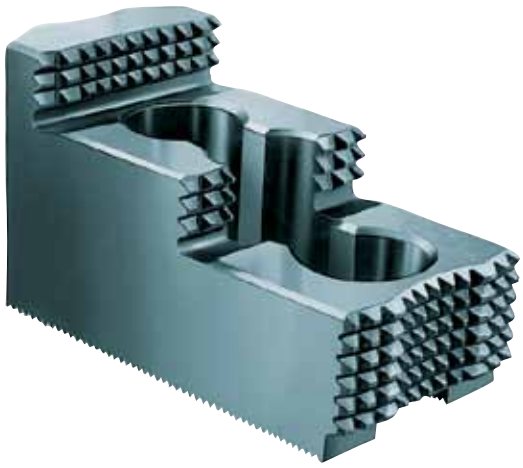

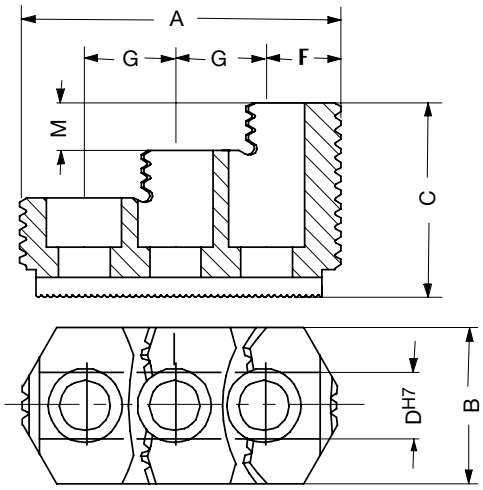

Tool group C 21
Type 543-31 **Reversible top jaws, 3-jaw set, hardened**, **serration 60°** - material: 16 MnCr 5

Chuck Type	**3-jaw set**	Jaw length A	Jaw width B	Jaw height C	D	F	G	M	Serration	Weight approx. kg
KFD-HE 130/3	**154814**[1] ●	54	23	27,5	10	13	14	10	1,5 x 60°	0,16
KFD-HE 170/3	**154674**[1] ●	66	34,7	36	12	12,5	20	12	1,5 x 60°	0,3
KFD-HE 210/3	**154676** ●	81	36	49	14	17,5	25	12	1,5 x 60°	0,6
	159776 ●	81	36	49	17	17,5	25	12	1/16"x60°	0,6
KFD-HE 254/3	**154678** ●	99,5	44,5	54	16	25,5	30	13	1,5 x 60°	1,2
KFD-HE 315/3	**154816**[1] ●	103	50	55,5	21	22,5	30	17	1,5 x 60°	1,5

[1] one step only
Hardened jaws, supplied as supplement or as spares, must be ground on the chuck.

Reversible top jaws, hardened, serration 60°

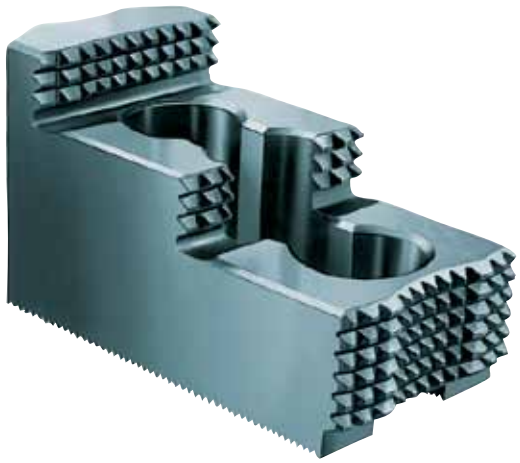

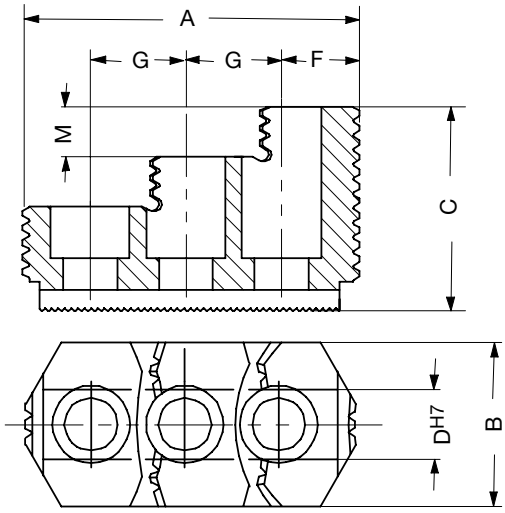

Tool group C 21
Type 530 **Reversible top jaws, set, hardened, serration 60°** - material: 16 MnCr 5

Chuck Type	2-jaw set	3-jaw set	Jaw length A	Jaw width B	Jaw height C	D	F	G	M	Serration	Weight approx. kg
KFM 130/3	**045798** ●	**046406** ●	56	26	37,5	11	13,5	16,5	10	1,5 x 60°	0,165
KFE 170/3; KFG 160/3; KFM 160/3	**046431** ●	**046410** ●	62	26	37,5	11	17,5	16,5	10	1,5 x 60°	0,215
KFE 215/3; KFG 215/3; KFM 215/3	**046433** ■	**046412**[1] ■	81	36	52,5	14	25	21	12	1,5 x 60°	0,6
KFE 280/3; KFG 280/3; KFM 280/3	**046437** ●	**046416** ●	96	44,5	54	20	30	26	12	1,5 x 60°	0,75
KFE 350/3; KFG 350/3; KFM 350/3	**046443** ●	**046422** ●	112	49,5	61	21	27	33	15	1,5 x 60°	1,55

[1] Near the serration reduced to 34 mm
Reversible top jaws jaws, supplied as supplement or as spares, must be ground on the chuck.

Reversible top jaws, hardened, tongue and groove

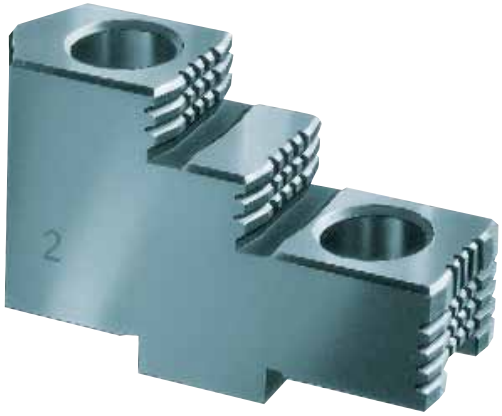

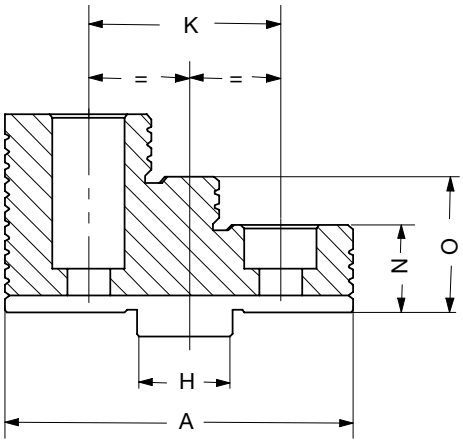

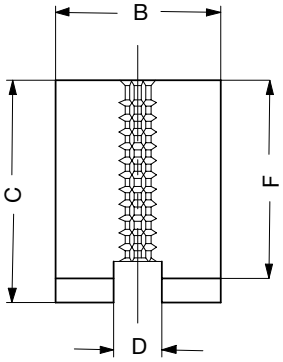

Tool group A 36
Type 530 **Reversible top jaws, 3-jaw set, hardened, tongue and groove,** for external and internal chucking - material: 16 MnCr 5

Chuck Type	3-jaw set	Jaw length A	Jaw width B	Jaw height C	D	F	H	K	N	O
DURO 160/3; DURO-NC 140/3; DURO-NC 175/3; DURO-NCSE 170/3; DURO-NCSE 180/3; DURO-T 160/3	**332774** ■	61,5	20,4	37	8	32,7	18	32	17,7	25,2
	137047 ■	62	24,4	40	8	35,7	18	32	17,7	25,7
	094012 ●	61,5	20,4	37	8	32,5	18	32	17,5	25
DURO 200/3; DURO-NC 200/3; D URO-NCSE 210/3; DURO-NCSE 215/3; DURO-T 200/3	**332775** ■	70,5	24,4	42	10	38	20	40	18	28
	137048	126	34,4	46	10	41	20	40	18	28
	094013 ●	70,5	24,4	43	10	38	20	40	18	28
DURO 250/3; DURO-NC 250/3; DURO-NCSE 225/3; DURO-NCSE 260/3; DURO-NCSE 265/3; DURO-NCSE 315/3; DURO-T 250/3	**332776** ■	92	34,4	55	12	50	20	40	22	36
	137049 ■	92	35,7	59	12	54	20	40	22	36
	094014 ●	92	34,4	55	12	50	20	40	22	36
DURO 315/3; DURO-NC 315/3; DURO-NCSE 400/3; DURO-T 315/3	**332777** ■	107	37,5	61	12	56	26	54	26	41
	137050 ■	107	50,4	67	12	61	26	54	26	41
	094015 ●	107	35,7	62	12	56	26	54	26	41
DURO 400/3; DURO 500/3; DURO-NC 400/3; DURO-NC 500/3; DURO-NCSE 500/3; DURO-T 400/3; DURO-T 500/3	**332778** ■	130	50,4	79	18	72	30	60	32	52
DURO 400/3; DURO 500/3; DURO-NC 400/3; DURO-NC 500/3; DURO-NCSE 500/3; DURO-NCSE 630/3; DURO-T 400/3; DURO-T 500/3	**094045** ●	130	50,4	79	18	72	30	60	32	52
DURO 630/3; DURO-NC 630/3; DURO-NCSE 630/3; DURO-T 630/3	**747081** ■	185	68	110	24	102	40	82	42	72
	140715 ●	185	68	110	24	102	40	82	42	72

Stepped and hardened jaws, supplied as supplement or as spares, must be ground on the chuck.

Base jaws GB, hardened, diagonally toothing

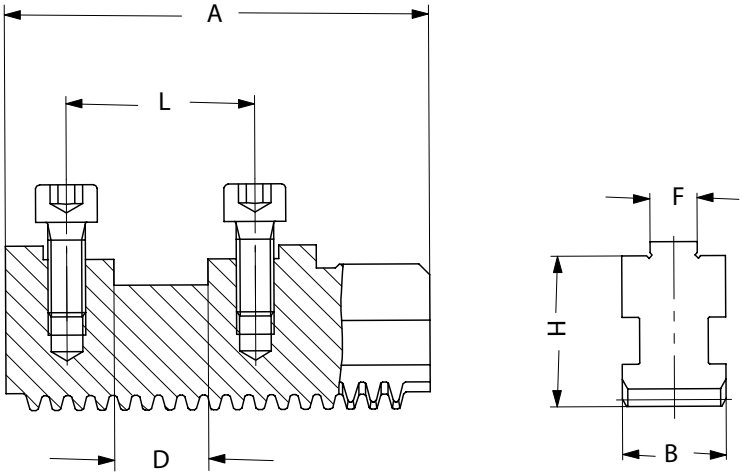

Tool group A28
Type 002 **Base jaw GB, 3-jaw set**, with mounting bolts

Chuck Type	**3-jaw set**	Jaw length A	Jaw width B	D	F	H	L	Weight approx. kg
DURO 125/3; DURO-T 125/3	**212119** ●	47	14	5	-	22	20	0,2
DURO-NC 140/3	**140636** ●	56	18	18	8	28,8	32	0,43
DURO 160/3; DURO-NC 175/3; DURO-T 160/3	**094004** ●	74	20	18	8	29,5	32	0,265
DURO 200/3; DURO-NC 200/3; DURO-T 200/3	**094005** ●	90	22	20	10	35	40	0,365
DURO 250/3; DURO-NC 250/3; DURO-T 250/3	**094006** ●	110	26	20	12	40	40	0,7
DURO 315/3; DURO-NC 315/3; DURO-T 315/3	**094007** ●	125	32	26	12	46	54	1,065
DURO 400/3; DURO 500/3; DURO-NC 400/3; DURO-NC 500/3; DURO-T 400/3; DURO-T 500/3	**094044** ●	160	45	30	18	52,7	60	2,35
DURO 630/3; DURO-NC 630/3; DURO-T 630/3	**140194** ●	230	65	40	24	62	82	5,665

● from stock ■ within 4 weeks

Soft one-piece jaws BL, diagonally toothing

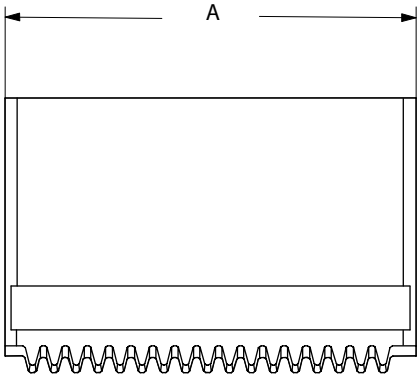

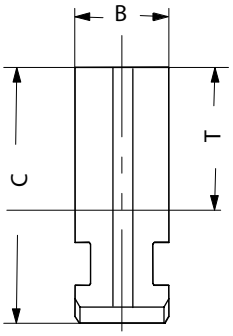

Tool group A28
Type 000 **Soft one-piece jaw BL, 3-jaw set**, unstepped, material 16MnCr5

Chuck Type	3-jaw set	Jaw length A	Jaw width B	Jaw height C	T	Weight approx. kg
DURO 125/3	**332762** ■	53	14	34	18	0,8
DURO-NC 140/3	**626158** ●	70,5	18	41,5	21	1,3
DURO 160/3; DURO-NC 175/3	**332763** ■	84,5	20	45	24	1,41
DURO 200/3; DURO-NC 200/3	**332764** ■	98,4	22	60	35	2,52
	162560 ■	98,4	22	80	55	3,5
	643088 ■	98,4	22	90	65	4
	321444 ■	98,4	22	95	70	4,2
DURO 200/3; DURO-NC 200/3; DURO-T 200/3	**249678** ●	98,4	22	60	35	0,9
DURO 250/3; DURO-NC 250/3	**332765** ■	118,7	26	70	41	4,23
	810394 ■	118,7	26	80	51	5
	162561 ■	118,7	26	90	61	5,7
	810396 ■	118,7	26	100	71	6,4
	616002 ■	70	26	100	71	3,5
	616000 ■	115	26	130	101	8,5
	695681 ■	180	26	140	111	14,3
DURO 250/3; DURO-NC 250/3; DURO-T 250/3	**249679** ●	118,7	26	70	41	1,535
DURO 315/3; DURO-NC 315/3	**332766** ■	136,6	32	79	44,5	7,3
DURO 315/3; DURO-NC 315/3; DURO-T 315/3	**249680** ●	136,6	32	79	44,5	2,4
DURO 400/3; DURO 500/3; DURO-NC 400/3; DURO-NC 500/3	**332767** ■	173,6	45	93	54	15,7
DURO 400/3; DURO 500/3; DURO-NC 400/3; DURO-NC 500/3; DURO-T 400/3; DURO-T 500/3	**249681** ●	173,6	45	93	54	5

One-piece reversible jaws EB, hardened, diagonally toothing

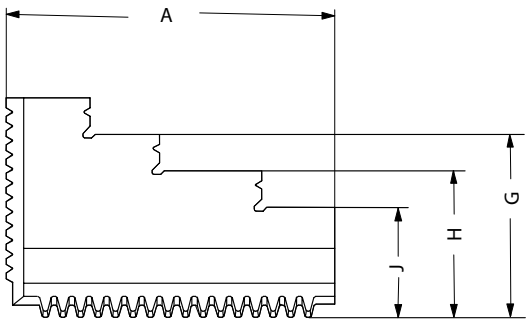

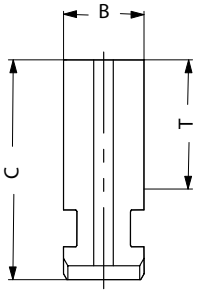

Tool group A28
Type 000 **One-piece jaw EB, 3-jaw set**, hardened

Chuck Type	3-jaw set	Jaw length A	Jaw width B	Jaw height C	G	H	J	T	Weight approx. kg
DURO 125/3	**332756** ●	50	14	34	29	24	19	18	0,6
DURO-NC 140/3	**140764** ●	62	18	49,5	42	34,5	27	29	1,2
DURO 160/3; DURO-NC 175/3	**332757** ■	77,7	20	45	37,5	30	22,5	24	1,1
DURO 160/3; DURO-NC 175/3; DURO-T 160/3	**094000** ●	77,7	20	45	37,5	30	22,5	24	0,5
DURO 200/3; DURO-NC 200/3	**332758** ■	94,7	22	60	50	40	30	35	1,9
DURO 200/3; DURO-NC 200/3; DURO-T 200/3	**094001** ●	94,7	22	60	50	40	30	35	0,635
DURO 250/3; DURO-NC 250/3	**332759** ■	114	26	70	56	-	42	41	3,3
DURO 250/3; DURO-NC 250/3; DURO-T 250/3	**094002** ●	114	26	70	56	-	42	41	1,135
DURO 315/3; DURO-NC 315/3	**332760** ■	130	32	79	64	-	49	44,5	5,3
DURO 315/3; DURO-NC 315/3; DURO-T 315/3	**094003** ●	130	32	79	64	-	49	44,5	1,835
DURO 400/3; DURO 500/3; DURO-NC 400/3; DURO-NC 500/3	**332761** ■	167	45	93	73	-	53	54	10,8
DURO 400/3; DURO 500/3; DURO-NC 400/3; DURO-NC 500/3; DURO-T 400/3; DURO-T 500/3	**094043** ●	167	45	93	73	-	53	54	3,665

Stepped and hardened jaws, supplied as supplement or as spares, must be ground on the chuck.
In case of a subsequent jaw delivery please send us the chuck.

● from stock ■ within 4 weeks

Draw-down jaws NB, diagonally toothing

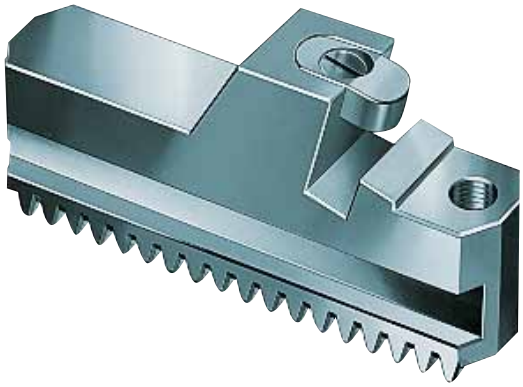

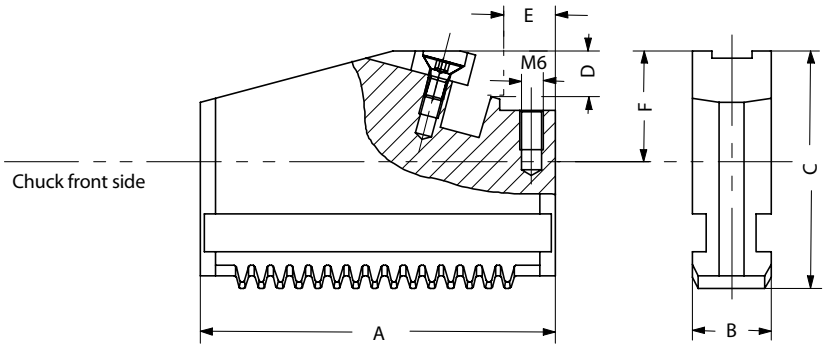

Tool group C 21
Type 545-00 **Draw-down jaws, piece**, without interchangeable clamping inserts, **diagonally toothing**

Chuck Type	Item no.	Jaw length A	Jaw width B	Jaw height C	D	E	F	Clamping range external	Clamping range internal	Max. swing	Thread
DURO 160/3; DURO-NC 140/3	**151030** ●	63	18	41,5	15	10,5	22,5	40-85	124-168	190	M6
	151031 ●	63	18	41,5	15	31,5	22,5	80-125	85-126	190	M6
DURO 160/3; DURO-T 160/3	**141037** ●	84,4	20	43,5	15	11	22,5	29-80	162-205	220	M6
	141038 ●	84,4	20	43,5	15	32	22,5	70-120	120-164	220	M6
DURO-NC 175/3;	**141037** ●	84,4	20	43,5	15	11	22,5	39-84	162-210	230	M6
	141038 ●	84,4	20	43,5	15	32	22,5	81-126	120-170	230	M6
DURO 200/3; DURO-NC 200/3; DURO-NCGB 200/3; DURO-T 200/3	**141039** ●	98,4	22	47,5	15	12	22,5	34-112	190-263	280	M6
	141040 ●	98,4	22	47,5	15	48	22,5	104-185	120-192	280	M6
DURO 250/3; DURO-NC 250/3; DURO-NCGB 250/3; DURO-T 250/3	**141041** ●	118,7	26	58,5	20	12	29,5	38-133	235-325	330	M6
	141042 ●	118,7	26	58,5	20	58	29,5	128-225	145-236	330	M6
DURO 315/3; DURO-NC 315/3; DURO-NCGB 315/3; DURO-T 315/3	**141043** ●	136,4	32	63,9	20	12	29,5	43-170	275-398	370	M6
DURO 315/3; DURO 400/3; DURO 500/3; DURO-NC 315/3; DURO-NCGB 315/3; DURO-T 315/3	**141044** ●	136,4	32	63,9	20	72	29,5	160-290	158-278	370	M6
DURO 400/3; DURO 500/3; DURO-NC 400/3; DURO-NC 500/3; DURO-NCGB 400/3; DURO-NCGB 500/3; DURO-T 400/3; DURO-T 500/3	**141045** ●	173,6	45	73,4	25	12	34,3	48-250	354-556	506	M6
DURO-NC 400/3; DURO-NCGB 400/3; DURO-T 400/3	**141046** ●	173,6	45	73,4	25	77	34,3	175-316	230-362	506	M6
DURO-NC 500/3; DURO-NCGB 500/3; DURO-T 500/3	**141048** ●	173,6	45	73,4	25	110	34,3	240-450	162-360	570	M6

Interchangeable clamping inserts

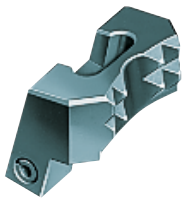

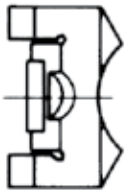

Tool group C 15
Type 545-60 **Interchangeable clamping inserts**, 1 piece, **with claws**

Chuck Type	Item no.	Size	Design	Contents of delivery
DURO-NC 140/3	**151029** ●	**140**	with claws	piece
DURO-NC 175/3; DURO-NC 200/3; DURO-NCGB 200/3; DURO-NCSE 170/3; DURO-NCSE 180/3; DURO-NCSE 210/3; DURO-NCSE 215/3; DURO-T 160/3; DURO-T 200/3	**141049** ●	**160/200**	with claws	piece
DURO-NC 250/3; DURO-NC 315/3; DURO-NCGB 250/3; DURO-NCGB 315/3; DURO-NCSE 225/3; DURO-NCSE 260/3; DURO-NCSE 265/3; DURO-NCSE 315/3; DURO-NCSE 400/3; DURO-T 250/3; DURO-T 315/3	**141052** ●	**250/315**	with claws	piece
DURO-NC 400/3; DURO-NC 500/3; DURO-NC 630/3; DURO-NCGB 400/3; DURO-NCGB 500/3; DURO-NCSE 500/3; DURO-T 400/3; DURO-T 500/3; DURO-T 630/3	**141055** ●	**400/500**	with claws	piece

Interchangeable clamping inserts

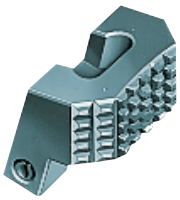

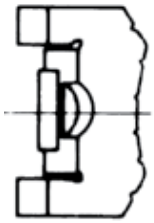

Tool group C 15
Type 545-70 **Interchangeable clamping inserts**, 1 piece, **with serrated toothing**

Chuck Type	Item no.	Size	Design	Contents of delivery
DURO-NC 140/3	**151039** ●	**140**	with serrated toothing	piece
DURO-NC 175/3; DURO-NC 200/3; DURO-NCGB 200/3; DURO-NCSE 170/3; DURO-NCSE 180/3; DURO-NCSE 210/3; DURO-NCSE 215/3; DURO-T 160/3; DURO-T 200/3	**141050** ●	**160/200**	with serrated toothing	piece
DURO-NC 250/3; DURO-NC 315/3; DURO-NCGB 250/3; DURO-NCGB 315/3; DURO-NCSE 225/3; DURO-NCSE 260/3; DURO-NCSE 265/3; DURO-NCSE 315/3; DURO-NCSE 400/3; DURO-T 250/3; DURO-T 315/3	**141053** ●	**250/315**	with serrated toothing	piece
DURO-NC 400/3; DURO-NC 500/3; DURO-NCGB 400/3; DURO-NCGB 500/3; DURO-NCSE 500/3; DURO-T 400/3; DURO-T 500/3	**141056** ●	**400/500**	with serrated toothing	piece

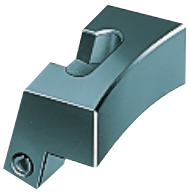

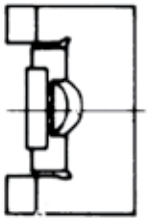

Tool group C 15
Type 545-80 **Interchangeable clamping inserts**, 1 piece, **with heat treatable surface**

Chuck Type	Item no.	Size	Design	Contents of delivery
DURO-NC 140/3	**151040** ●	**140**	with heat treatable surface	piece
DURO-NC 175/3; DURO-NC 200/3; DURO-NCGB 200/3; DURO-NCSE 170/3; DURO-NCSE 180/3; DURO-NCSE 210/3; DURO-NCSE 215/3; DURO-T 160/3; DURO-T 200/3	**141051** ●	**160/200**	with heat treatable surface	piece
DURO-NC 250/3; DURO-NC 315/3; DURO-NCGB 250/3; DURO-NCGB 315/3; DURO-NCSE 225/3; DURO-NCSE 260/3; DURO-NCSE 265/3; DURO-NCSE 315/3; DURO-NCSE 400/3; DURO-T 250/3; DURO-T 315/3	**141054** ●	**250/315**	with heat treatable surface	piece
DURO-NC 400/3; DURO-NC 500/3; DURO-NCGB 400/3; DURO-NCGB 500/3; DURO-NCSE 500/3; DURO-T 400/3; DURO-T 500/3	**141057** ●	**400/500**	with heat treatable surface	piece

Tool group C 15
Typ 544-00 **Interchangeable workpiece rests**, 1 piece, **in different lengths**

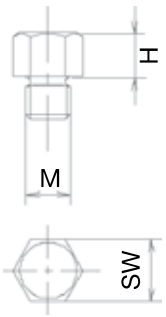

Item no.	Size	M	H	SW
151040 ●	**2**	M6	5	9
141051 ●	**2**	M6	10	9
141054 ●	**2**	M6	15	9

Base jaws GBG, hardened, straight toothing

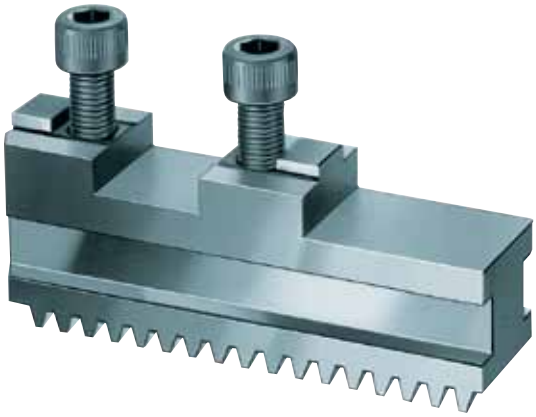

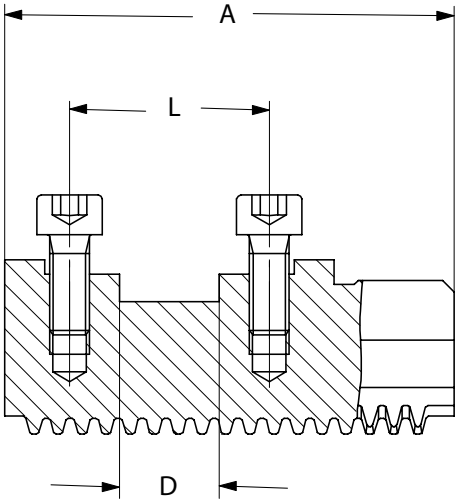

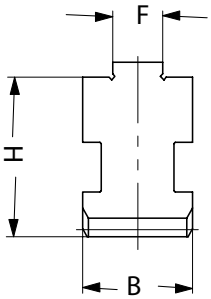

Tool group C 21
Type 574-11 **Base jaws, 3-jaw-set, hardened, straight toothing,** with cylindrical screws DIN 912-12.9

Chuck Type	**3-jaw set**	Jaw length A	Jaw width B	D	F	H	L	Weight approx. kg
DURO-NCSE 170/3; DURO-NCSE 180/3	**463548** ●	65	20	18	8	27,5	32	0,7
DURO-NCSE 210/3; DURO-NCSE 215/3; DURO-NCSE 225/3	**463549** ●	85	22	20	10	29,5	40	1
DURO-NCSE 260/3; DURO-NCSE 265/3	**463550** ●	104	26	20	12	37	40	1,8
DURO-NCSE 315/3	**463551** ●	115	32	20	12	43	40	2,7
DURO-NCSE 400/3	**463552** ●	125	32	26	12	43	54	3
DURO-NCSE 500/3	**463553** ■	160	45	30	18	57	60	7,1
DURO-NCSE 630/3	**463554** ■	200	45	30	18	57	60	9

Soft one-piece jaws BLG, straight toothing

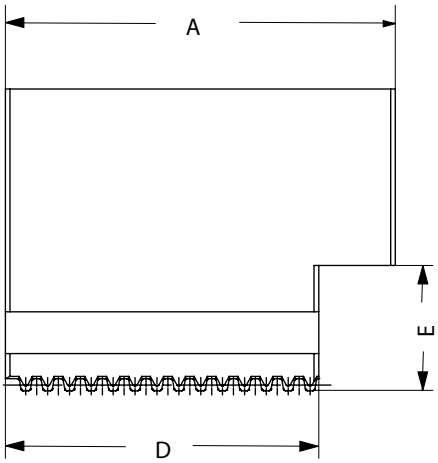

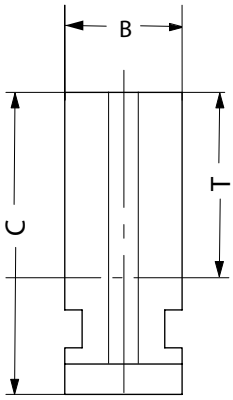

Tool group C 21
Type 574-37 **Soft one-piece jaws**, **3-jaw set**, **straight toothing, guidance hardened and ground** - material: 16 MnCr 5

Chuck Type	**3-jaw set**	Jaw length A	Jaw width B	Jaw height C	D	E	T	Weight approx. kg
DURO-NCSE 170/3; DURO-NCSE 180/3	**463562** ●	65	20	55	56	25	33	1,3
DURO-NCSE 210/3; DURO-NCSE 215/3	**463563** ●	84	22	65	67,5	27	38	2,2
DURO-NCSE 225/3; DURO-NCSE 260/3; DURO-NCSE 265/3	**463564** ●	99	26	84	77	36	53	4,3
DURO-NCSE 315/3	**463565** ●	121	32	90	93	41	54	6,7
DURO-NCSE 400/3	**463566** ●	148	32	100	120	41	64	9,2
DURO-NCSE 500/3	**463567** ■	175	45	124	154	54	77	20,5
DURO-NCSE 630/3	**463568** ■	230	45	134	200	54	87	29,2

● from stock ■ within 4 weeks

One-piece reversible jaws EBG, hardened, straight toothing

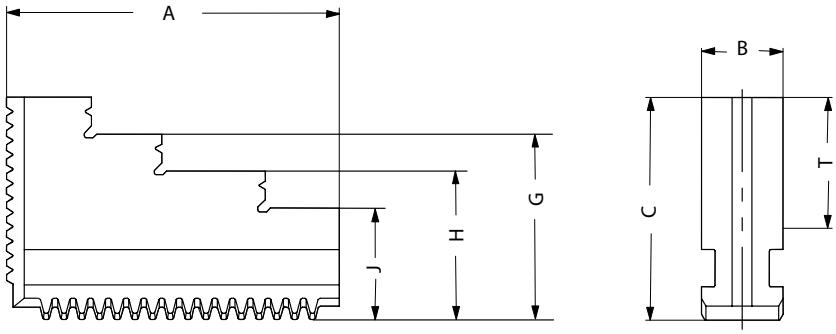

Tool group C 21
Type 574-27 **One-piece reversible jaws**, **3-jaw set**, **hardened**, **straight toothing** - material: 16 MnCr 5

Chuck Type	**3-jaw set**	Jaw length A	Jaw width B	Jaw height C	G	H	J	T	Weight approx. kg
DURO-NCSE 170/3; DURO-NCSE 180/3	**463555** ●	58	20	44	37	30	23	23	0,6
DURO-NCSE 210/3; DURO-NCSE 215/3	**463556** ●	75	22	51	43	35	27	26	1,3
DURO-NCSE 225/3; DURO-NCSE 260/3; DURO-NCSE 265/3	**463557** ●	90	26	60	50	40	30	31	2
DURO-NCSE 315/3	**463558** ●	117	32	66	56	46	36	32	3,4
DURO-NCSE 400/3	**463559** ●	137	32	70	59	48	37	36	4,9
DURO-NCSE 500/3	**463560** ■	176	45	93		73	53	46	11,7

Hardened jaws, supplied as supplement or as spares, must be ground on the chuck.

Draw-down jaws NBG, straight toothing

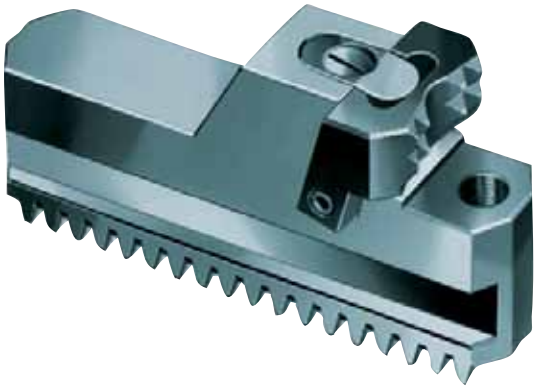

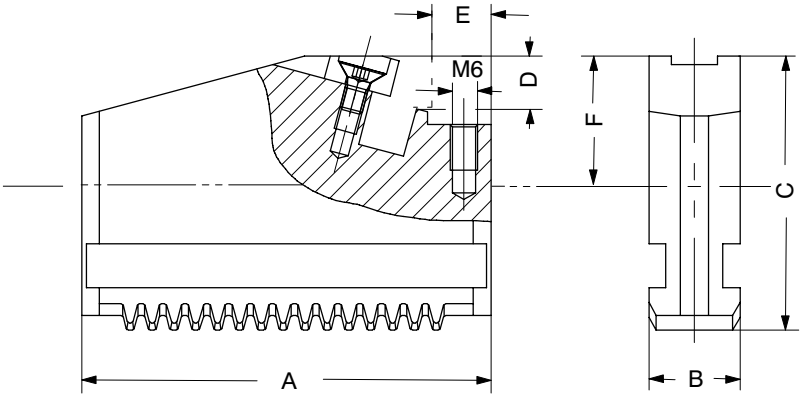

Tool group C 21
Type 545-30 **Draw-down jaws**, 1 piece, without interchangeable clamping inserts, **straight toothing**

Chuck Type	Item no.	Jaw length A	Jaw width B	Jaw height C	D	E	F	Clamping range external	Clamping range internal	Max. swing	Thread
DURO-NCSE 170/3; DURO-NCSE 180/3	**485522** ●	65	20	43	15	11	22,5	38-83	125-172	195	M6
	485523 ●	72	20	43	15	30	22,5	78-122	98-134	209	M6
DURO-NCSE 210/3; DURO-NCSE 215/3	**485524** ●	85	22	47	15	12	22,5	38-121	170-242	270	M6
	485525 ●	95	22	47	15	45	22,5	113-187	114-185	290	M6
DURO-NCSE 225/3; DURO-NCSE 260/3; DURO-NCSE 265/3	**485526** ●	104	26	58	20	12	29,5	42-130	204-290	312	M6
	485527 ●	104	26	58	20	50,5	29,5	120-208	128-220	312	M6
DURO-NCSE 315/3	**485528** ●	115	32	63	20	12	29,5	44-164	236-344	374	M6
	485529 ●	123	32	63	20	61,5	29,5	148-262	138-245	390	M6
DURO-NCSE 400/3	**485530** ●	125	32	63	20	12	29,5	48-222	294-424	452	M6
	485531 ●	134	32	63	20	67	29,5	204-332	132-312	470	M6
DURO-NCSE 500/3	**485532** ■	160	45	81	20	12	34	45-250	314-520	552	M6
	485533 ■	160	45	81	25	96	34	225-418	161-354	552	M6

Interchangeable clamping inserts

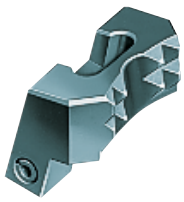

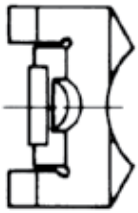

Tool group C 15
Type 545-60 **Interchangeable clamping inserts**, 1 piece, **with claws**

Chuck Type	**Item no.**	**Size**	Design	Contents of delivery
DURO-NC 140/3	**151029** ●	**140**	with claws	piece
DURO-NC 175/3; DURO-NC 200/3; DURO-NCGB 200/3; DURO-NCSE 170/3; DURO-NCSE 180/3; DURO-NCSE 210/3; DURO-NCSE 215/3; DURO-T 160/3; DURO-T 200/3	**141049** ●	**160/200**	with claws	piece
DURO-NC 250/3; DURO-NC 315/3; DURO-NCGB 250/3; DURO-NCGB 315/3; DURO-NCSE 225/3; DURO-NCSE 260/3; DURO-NCSE 265/3; DURO-NCSE 315/3; DURO-NCSE 400/3; DURO-T 250/3; DURO-T 315/3	**141052** ●	**250/315**	with claws	piece
DURO-NC 400/3; DURO-NC 500/3; DURO-NC 630/3; DURO-NCGB 400/3; DURO-NCGB 500/3; DURO-NCSE 500/3; DURO-T 400/3; DURO-T 500/3; DURO-T 630/3	**141055** ●	**400/500**	with claws	piece

Interchangeable clamping inserts

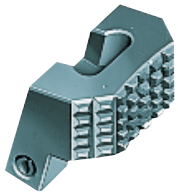

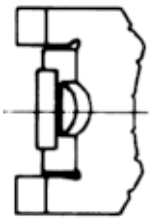

Tool group C 15
Type 545-70 **Interchangeable clamping inserts**, 1 piece, **with serrated toothing**

Chuck Type	Item no.	Size	Design	Contents of delivery
DURO-NC 140/3	**151039** ●	**140**	with serrated toothing	piece
DURO-NC 175/3; DURO-NC 200/3; DURO-NCGB 200/3; DURO-NCSE 170/3; DURO-NCSE 180/3; DURO-NCSE 210/3; DURO-NCSE 215/3; DURO-T 160/3; DURO-T 200/3	**141050** ●	**160/200**	with serrated toothing	piece
DURO-NC 250/3; DURO-NC 315/3; DURO-NCGB 250/3; DURO-NCGB 315/3; DURO-NCSE 225/3; DURO-NCSE 260/3; DURO-NCSE 265/3; DURO-NCSE 315/3; DURO-NCSE 400/3; DURO-T 250/3; DURO-T 315/3	**141053** ●	**250/315**	with serrated toothing	piece
DURO-NC 400/3; DURO-NC 500/3; DURO-NCGB 400/3; DURO-NCGB 500/3; DURO-NCSE 500/3; DURO-T 400/3; DURO-T 500/3	**141056** ●	**400/500**	with serrated toothing	piece

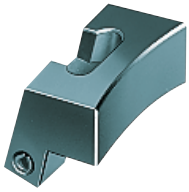

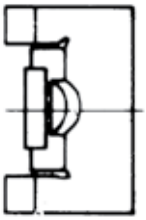

Tool group C 15
Type 545-80 **Interchangeable clamping inserts**, 1 piece, **with heat treatable surface**

Chuck Type	Item no.	Size	Design	Contents of delivery
DURO-NC 140/3	**151040** ●	**140**	with heat treatable surface	piece
DURO-NC 175/3; DURO-NC 200/3; DURO-NCGB 200/3; DURO-NCSE 170/3; DURO-NCSE 180/3; DURO-NCSE 210/3; DURO-NCSE 215/3; DURO-T 160/3; DURO-T 200/3	**141051** ●	**160/200**	with heat treatable surface	piece
DURO-NC 250/3; DURO-NC 315/3; DURO-NCGB 250/3; DURO-NCGB 315/3; DURO-NCSE 225/3; DURO-NCSE 260/3; DURO-NCSE 265/3; DURO-NCSE 315/3; DURO-NCSE 400/3; DURO-T 250/3; DURO-T 315/3	**141054** ●	**250/315**	with heat treatable surface	piece
DURO-NC 400/3; DURO-NC 500/3; DURO-NCGB 400/3; DURO-NCGB 500/3; DURO-NCSE 500/3; DURO-T 400/3; DURO-T 500/3	**141057** ●	**400/500**	with heat treatable surface	piece

Tool group C 15
Typ 544-00 **Interchangeable workpiece rests**, 1 piece, **in different lengths**

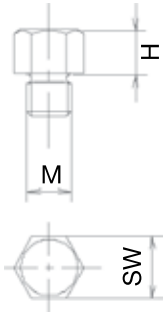

Item no.	Size	M	H	SW
151040 ●	**2**	M6	5	9
141051 ●	**2**	M6	10	9
141054 ●	**2**	M6	15	9

Claw-type jaws, hardened, serration 90°, groove 10/12

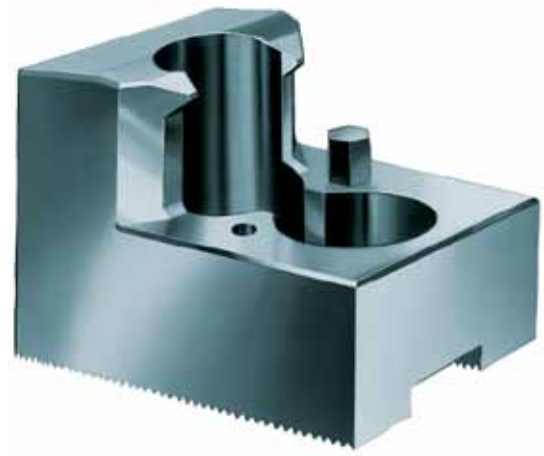

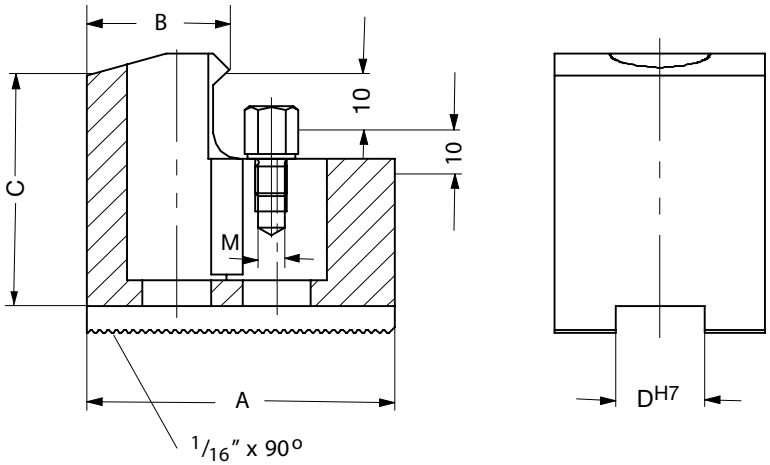

Tool group C 21
Type 544-50 **Claw-type jaws**, 1 piece, **hardened**, **serration 90°** - width of the groove **10**

Chuck Type	Item no.	Jaw length A	B	Jaw height C	D	Clamping range external	Clamping range internal	Max. swing	Thread
KFD-HS 110/3	**149920** ●	**42**	37,1	27	10	20-49	84-130	110	M5
	149921 ●	**42**	23,4	27	10	47-70	56-102	110	M5
	149922 ●	**47**	17,7	27	10	68-100	45-75	110	M5
KFD-HS 130/3	**147259** ■	**50**	41	27	10	27-67	100-130	130	M5
	147261 ■	**44**	22	27	10	58-108	58-108	130	M5
KFD-HS 140/3	**147261** ■	**44**	22	27	10	61-114	61-114	140	M5
	147259 ■	**50**	41	27	10	35-72	106-140	140	M5
KFD 130/2; KFD 130/3; KFD-HE 170/3; KFD-HS 160/2; KFD-HS 160/3; KFD-HS 160/4; KFD-HS 175/3; LVE 125/3; LVE 160/3; SSH 160/2; SSH 160/3; SSP 160/2; SSP 160/3	**144320** ●	**66**	52	38	12	38-84	122-180	160	M6
	144321 ●	**56**	34	38	12	78-122	92-140	160	M6
	144322 ●	**66**	25	38	12	120-146	70-100	160	M6
KFD-HS 175/3;	**144320** ●	**66**	52	38	12	48-100	132-195	175	M6
	144321 ●	**56**	34	38	12	88-140	102-155	175	M6
	144322 ●	**66**	25	38	12	130-160	70-115	175	M6

Tool group C 15
Typ 544-00 **Interchangeable workpiece rests**, 1 piece, **in different lengths**

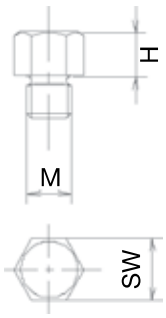

Item no.	Size	M	H	SW
147263 ●	**1**	M5	5	7
139177 ●	**1**	M5	8	7
298191 ●	**1**	M5	10	7
289188 ●	**2**	M6	5	9
138950 ●	**2**	M6	10	9
725581 ●	**2**	M6	15	9

● from stock ■ within 4 weeks

Claw-type jaws, hardened, serration 90°, groove 17

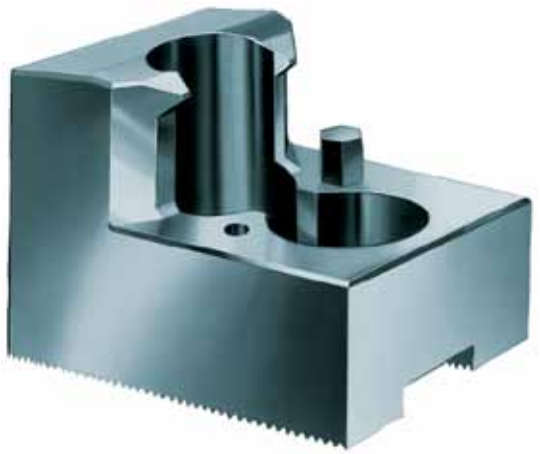

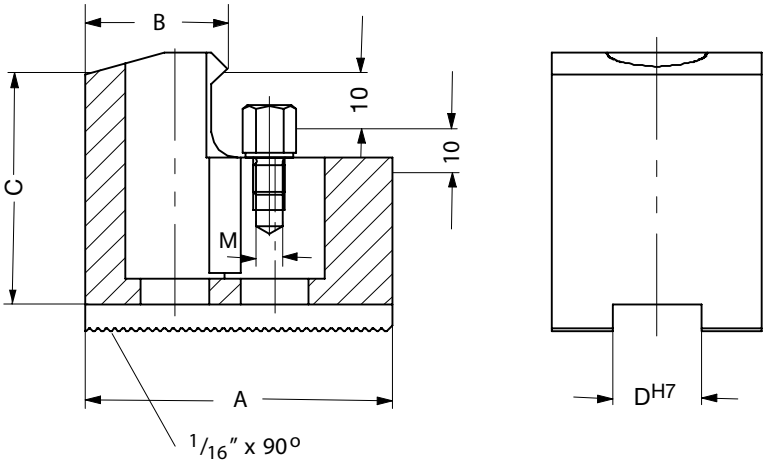

Tool group C 21
Type 544-50 **Claw-type jaws**, 1 piece, **hardened**, **serration 90°** - width of the groove **17**

Chuck Type	Item no.	Jaw length A	B	Jaw height C	D	Clamping range external	Clamping range internal	Max. swing	Thread
KFD 160/2; KFD 160/3; KFD 160/4; KFD 200/2; KFD 200/3; KFD 200/4; KFD-EC 200/3; KFD-F-EC 200/3; KFD-HE 210/3; KFD-HS 200/2; KFD-HS 200/3; KFD-HS 200/4; KFD-HS 250/2; KFD-HS 250/3; KFD-HS 250/4; KFL 250/3; LVE 200/3; SSH 200/2; SSH 200/3; SSP 200/2; SSP 200/3	**137031** ●	**67**	53	45	17	38-56	-	170	M6
	137032 ●	**65**	46	45	17	51-71	146-178	170	M6
	137033 ●	**55**	39	45	17	-	132-165	195	M6
	137034 ●	**50**	31	45	17	83-102	114-123	170	M6
	137035 ●	**55**	27	45	17	97-117	102-116	170	M6
	137036 ●	**65**	19	45	17	-	50-70	170	M6
	137037 ●	**65**	26	45	17	-	68-85	170	M6
	137038 ●	**55**	24	45	17	-	82-104	170	M6
	137039 ●	**55**	40	45	17	66-87	120-135	170	M6
KFD 200/2; KFD 200/3; KFD 200/4; KFD-EC 200/3; KFD-F-EC 200/3; KFD-HE 210/3; KFD-HS 200/2; KFD-HS 200/3; KFD-HS 200/4; LVE 200/3; SSH 200/2; SSH 200/3; SSP 200/2; SSP 200/3	**137031** ●	**67**	53	45	17	60-96	-	210	M6
	137032 ●	**65**	46	45	17	73-111	168-218	210/260	M6
	137033 ●	**55**	39	45	17	-	154-205	235	M6
	137034 ●	**50**	31	45	17	105-142	136-163	210	M6
	137035 ●	**55**	27	45	17	119-157	124-156	210	M6
	137036 ●	**65**	19	45	17	-	72-110	210	M6
	137037 ●	**65**	26	45	17	-	90-125	210	M6
	137038 ●	**55**	24	45	17	-	104-144	210	M6
	137039 ●	**55**	40	45	17	88-127	144-175	210	M6
KFD 250/2; KFD 250/3; KFD 250/4; KFD-HS 250/2; KFD-HS 250/3; KFD-HS 250/4; KFL 250/3;	**137031** ●	**67**	53	45	17	90-146	-	260	M6
	137032 ●	**65**	46	45	17	103-161	-	260	M6
	137033 ●	**55**	39	45	17	-	184-255	285	M6
	137034 ●	**50**	31	45	17	135-192	166-213	260	M6
	137035 ●	**55**	27	45	17	149-207	154-206	260	M6
	137036 ●	**65**	19	45	17	-	102-160	260	M6
	137037 ●	**65**	26	45	17	-	120-175	260	M6
	137038 ●	**55**	24	45	17	-	134-194	260	M6
	137039 ●	**55**	40	45	17	118-177	174-225	260	M6

Interchangeable workpiece rests in different lengths on page 26

Claw-type jaws, hardened, serration 90°, groove 21

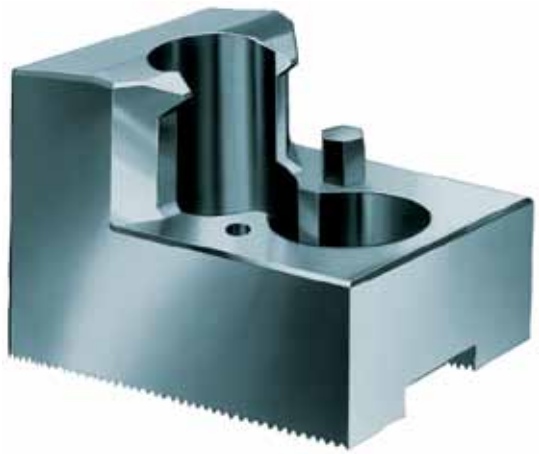

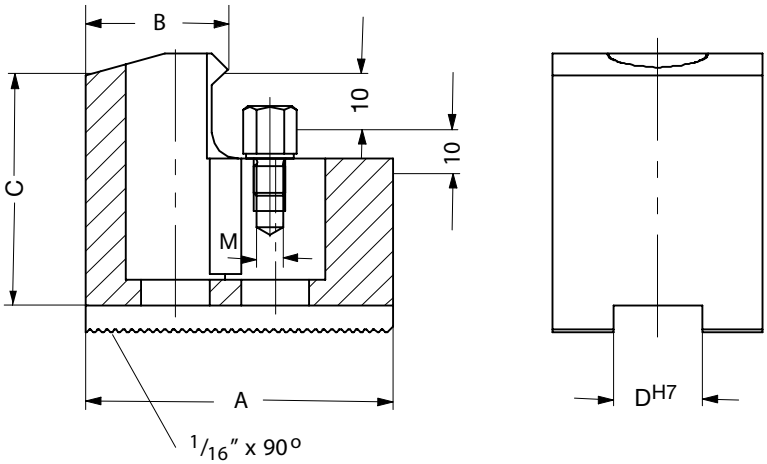

Tool group C 21
Type 544-50 **Claw-type jaws**, 1 piece, **hardened**, **serration 90°** - width of the groove **21**

Chuck Type	Item no.	Jaw length A	B	Jaw height C	D	Clamping range external	Clamping range internal	Max. swing	Thread
KFD 250/2; KFD 250/4; KFD 315/2; KFD 315/3; KFD 315/4; KFD-EC 250/3; KFD-EC 315/3; KFD-F-EC 250/3; KFD-F-EC 315/3; KFD-HE 254/3; KFD-HE 315/3; KFD-HS 250/3; KFD-HS 315/2; KFD-HS 315/3; KFL 315/3; KFL 400/3; LVE 250/3; LVE 315/3; SSH 250/2; SSH 250/3; SSH 315/2; SSH 315/3; SSP 250/2; SSP 250/3; SSP 315/2; SSP 315/3	**137041** ●	**95**	80	50	21	53-95	-	260	M6
	137042 ●	**75**	60	50	21	92-133	212-265	260	M6
	137043 ●	**60**	43	50	21	125-167	178-240	260	M6
	137044 ●	**70**	37	50	21	156-198	146-186	278	M6
	137045 ●	**95**	25	50	21	-	68-112	260	M6
	137046 ●	**80**	30	50	21	-	108-154	260	M6
KFD 250/2; KFD 250/4; KFD 315/2; KFD 315/3; KFD 315/4; KFD-EC 250/3; KFD-EC 315/3; KFD-F-EC 250/3; KFD-F-EC 315/3; KFD-HE 254/3; KFD-HE 315/3; KFD-HS 250/3; KFD-HS 315/2; KFD-HS 315/3; KFL 315/3; KFL 400/3; LVE 250/3; LVE 315/3; SSH 250/2; SSH 250/3; SSH 315/2; SSH 315/3; SSP 250/2; SSP 250/3; SSP 315/2; SSP 315/3	**137041** ●	**95**	80	50	21	66-160	-	325	M6
	137042 ●	**75**	60	50	21	105-198	225-330	325/365	M6
	137043 ●	**60**	43	50	21	138-232	191-305	325/343	M6
	137044 ●	**70**	37	50	21	169-263	159-240	325/343	M6
	137045 ●	**95**	25	50	21	-	81-177	325	M6
	137046 ●	**80**	30	50	21	-	151-304	325	M6
KFD 250/2; KFD 250/4; KFD 315/2; KFD 315/3; KFD 315/4; KFD-EC 250/3; KFD-EC 315/3; KFD-F-EC 250/3; KFD-F-EC 315/3; KFD-HE 254/3; KFD-HE 315/3; KFD-HS 250/3; KFD-HS 315/2; KFD-HS 315/3; KFL 315/3; KFL 400/3; LVE 250/3; LVE 315/3; SSH 250/2; SSH 250/3; SSH 315/2; SSH 315/3; SSP 250/2; SSP 250/3; SSP 315/2; SSP 315/3	**137041** ●	**95**	80	50	21	106-245	-	415	M6
	137042 ●	**75**	60	50	21	145-283	255-415	415/450	M6
	137043 ●	**60**	43	50	21	178-317	221-390	415/433	M6
	137044 ●	**70**	37	50	21	209-348	189-336	415	M6
	137045 ●	**95**	25	50	21	-	111-262	415	M6
	137046 ●	**80**	30	50	21	-	151-304	415	M6

Tool group C 15
Typ 544-00 **Interchangeable workpiece rests**, 1 piece, **in different lengths**

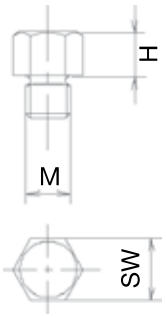

Item no.	Size	M	H	SW
289188 ●	**2**	M6	5	9
138950 ●	**2**	M6	10	9
725581 ●	**2**	M6	15	9

Claw-type jaws, hardened, serration 90°, groove 25,5

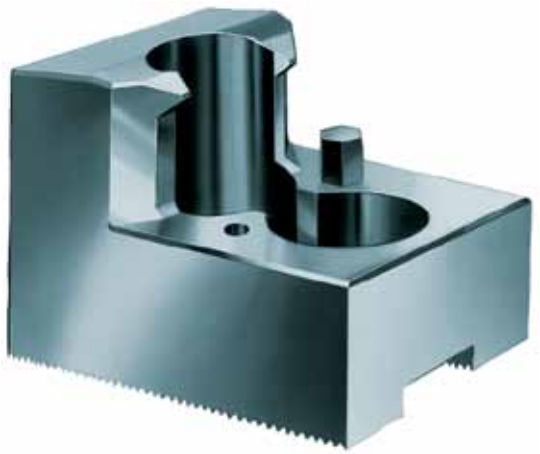

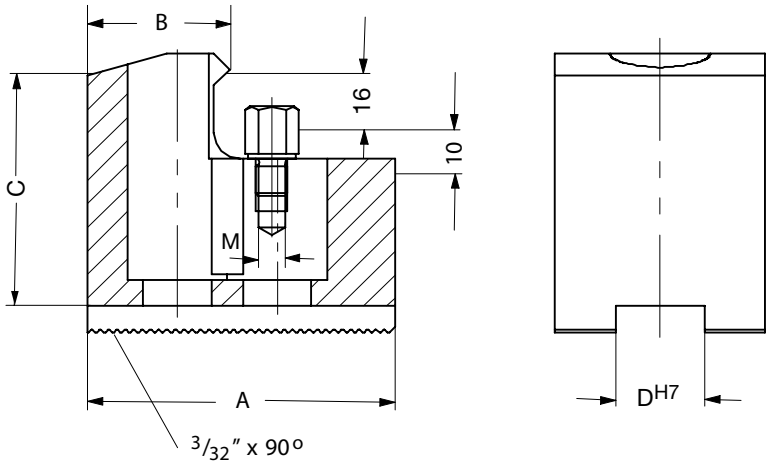

Tool group C 21
Type 544-50 **Claw-type jaws**, 1 piece, **hardened**, **serration 90°** - width of the groove **25,5**

Chuck Type	Item no.	Jaw length A	B	Jaw height C	D	Clamping range external	Clamping range internal	Max. swing	Thread
KFD 400/2; KFD 400/3; KFD 400/4; KFD 500/2; KFD 500/3; KFD 500/4; KFD 630/2; KFD 630/3; KFD 630/4; KFD 800/3; KFD 800/4; KFD-EC 400/3; KFD-F-EC 400/3; KFD-HE 400/3; KFD-HS 400/3; KFD-HS 500/3; KFL 500/3; KFL 600/3; LVE 400/3; LVE 500/3; LVE 600/3	**137051** ●	**130**	113	65	25,5	80-180	300-460	415	M6
	137052 ●	**90**	67	65	25,5	170-270	-	415	M6
	137053 ●	**100**	45	65	25,5	256-390	260-395	415	M6
	137054 ●	**130**	33	65	25,5	-	100-215	415	M6
KFD 400/2; KFD 400/3; KFD 400/4; KFD 500/2; KFD 500/3; KFD 500/4; KFD 630/2; KFD 630/3; KFD 630/4; KFD 800/3; KFD 800/4; KFD-EC 400/3; KFD-F-EC 400/3; KFD-HE 400/3; KFD-HS 400/3; KFD-HS 500/3; KFL 500/3; KFL 600/3; LVE 400/3; LVE 500/3; LVE 600/3	**137051** ●	**130**	113	65	25,5	80-280	300-560	515/600	M6
	137052 ●	**90**	67	65	25,5	170-270	-	515	M6
	137053 ●	**100**	45	65	25,5	270-494	200-400	590/515	M6
	137054 ●	**130**	33	65	25,5	-	100-315	515	M6
KFD 400/2; KFD 400/3; KFD 400/4; KFD 500/2; KFD 500/3; KFD 500/4; KFD 630/2; KFD 630/3; KFD 630/4; KFD 800/3; KFD 800/4; KFD-EC 400/3; KFD-F-EC 400/3; KFD-HE 400/3; KFD-HS 400/3; KFD-HS 500/3; KFL 500/3; KFL 600/3; LVE 400/3; LVE 500/3; LVE 600/3	**137051** ●	**130**	113	65	25,5	114-410	334-690	645/730	M6
	137052 ●	**90**	67	65	25,5	204-500	-	645	M6
	137053 ●	**100**	45	65	25,5	290-619	220-525	720/645	M6
	137054 ●	**130**	33	65	25,5	-	134-445	645	M6

Tool group C 15
Typ 544-00 **Interchangeable workpiece rests**, 1 piece, **in different lengths**

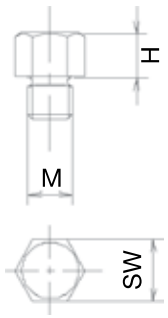

Item no.	Size	M	H	SW
289188 ●	**2**	M6	5	9
138950 ●	**2**	M6	10	9
725581 ●	**2**	M6	15	9

Claw-type jaws, hardened, serration 60°

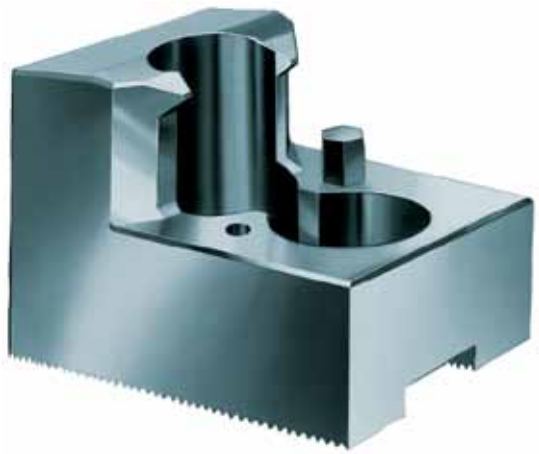

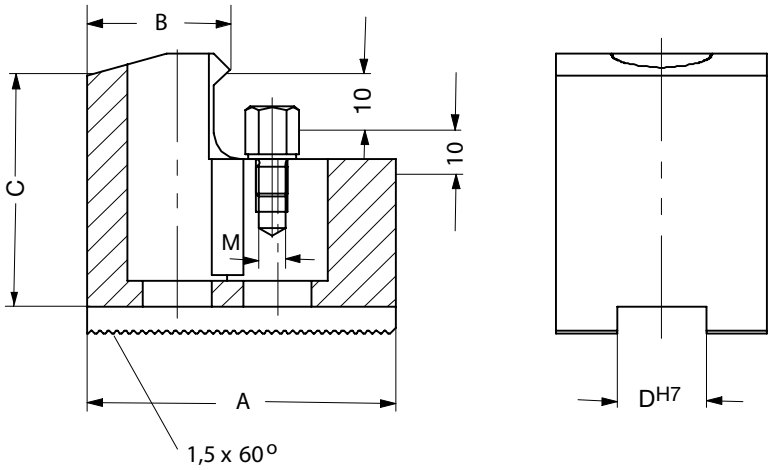

Tool group C 21
Type 543-33 **Claw-type jaws**, 1 piece, **hardened**, **serration 60°** - width of the groove **12**

Chuck Type	Item no.	Jaw length A	B	Jaw height C	D	Clamping range external	Clamping range internal	Max. swing	Thread
KFD-HE 170/3	**156025** ■	**67**	53	45	12	39-83	-	170	M6
	156027 ■	**65**	46	45	12	52-98	150-190	170	M6
	156029 ■	**55**	40	45	12	78-124	125-168	170	M6
	161189 ■	**55**	24	45	12	110-155	92-135	170	M6
KFD-HE 254/3	**156099** ●	**95**	80	50	16	60-102	-	250	M6
	156101 ●	**75**	60	50	16	99-140	222-275	250	M6
	156103 ●	**60**	43	50	16	132-174	188-250	250	M6
	156105 ●	**70**	37	50	16	163-205	158-198	250	M6

Tool group C 15
Typ 544-00 **Interchangeable workpiece rests**, 1 piece, **in different lengths**

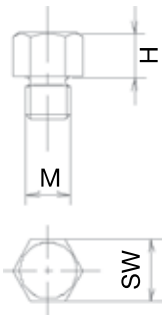

Item no.	Size	M	H	SW
289188 ●	**2**	M6	5	9
138950 ●	**2**	M6	10	9
725581 ●	**2**	M6	15	9

● from stock ■ within 4 weeks

Claw-type jaws, hardened, tongue and groove

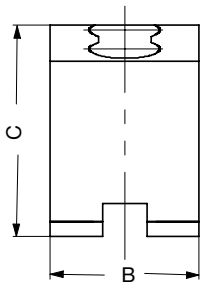

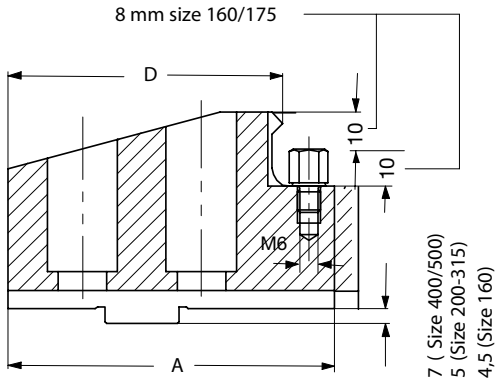

Tool group C 21
Type 544-00 **Reversible claw-type top jaws**, tongue and groove, 1 piece, hardened

Chuck Type	Item no.	Jaw length A	Jaw width B	Jaw height C	D	Clamping range external	Clamping range internal	Max. swing	Thread
DURO-NC 140/3; DURO-NC 175/3; DURO-NCSE 170/3; DURO-NCSE 180/3; DURO-T 160/3	**137060** ●	66	24	37,5	17	-	50-84	190	M6
	137061 ●	66	20	37,5	61	24-60	142-182	190	M6
	137062 ●	56	20	37,5	29	74-118	80-130	190	M6
DURO 160/3; DURO-NC 160/3; DURO-T 160/3	**137060** ●	66	24	37,5	17	-	50-105	220	M6
	137061 ●	66	20	37,5	61	30-88	140-214	220	M6
	137062 ●	56	20	37,5	29	70-150	80-152	220	M6
DURO-NC 175/3; DURO-NCSE 170/3; DURO-NCSE 180/3;	**137060** ●	66	24	37,5	17	-	58-113	230	M6
	137061 ●	66	20	37,5	61	38-96	148-222	230	M6
	137062 ●	56	20	37,5	29	78-158	88-160	230	M6
DURO 200/3; DURO-NC 200/3; DURO-NCGB 200/3; DURO-NCSE 210/3; DURO-NCSE 215/3; DURO-T 160/3; DURO-T 200/3	**137064** ●	81	24	43	71	40-130	166-250	280	M6
	137065 ●	66	24	43	38,5	76-200	98-205	280	M6
	137066 ●	79	34	43	29,5	-	72-185	280	M6
	137067 ●	81	34	43	71	40-130	166-250	280	M6
	137068 ●	66	34	43	38,5	76-200	98-205	280	M6
DURO-NC 250/3; DURO-NCGB 250/3; DURO-NCSE 225/3; DURO-NCSE 260/3; DURO-NCSE 265/3; DURO-NCSE 315/3; DURO-T 250/3	**137108** ●	90	34	55	78	50-185	180-304	330	M6
	137109 ●	72	34	55	38	94-260	104-252	330	M6
	137110 ●	80	50	55	29	-	70-215	330	M6
	137111 ●	90	50	55	78	50-165	180-304	330	M6
	137112 ●	72	50	55	38	94-240	104-252	330	M6
DURO 315/3; DURO-NC 315/3; DURO-NCGB 315/3; DURO-NCSE 400/3; DURO-T 315/3	**137114** ●	100	34	62	90	50-222	212-374	404	M6
	137115 ●	86	34	62	42	120-320	116-316	404	M6
	137116 ●	93	50	62	30	-	80-275	404	M6
	137117 ●	106	50	62	90	50-222	212-384	404	M6
	137118 ●	86	50	62	42	120-320	116-316	404	M6
DURO 400/3; DURO-NC 400/3; DURO-NCGB 400/3	**137119** ●	124	50	62	39	-	100-350	506	M6
	137120 ●	124	50	62	112	280-482	280-482	506	M6
	137121 ●	100	50	62	48	155-395	155-395	506	M6
DURO 500/3; DURO-NC 500/3; DURO-NCGB 500/3; DURO-NCSE 500/3; DURO-NCSE 630/3; DURO-T 500/3	**137119** ●	124	50	62	39	-	100-410	570	M6
	137120 ●	124	50	62	112	50-342	280-542	570	M6
	137121 ●	100	50	62	48	165-464	155-455	570	M6

Tool group C 15
Typ 544-00 **Interchangeable workpiece rests**, 1 piece, **in different lengths**

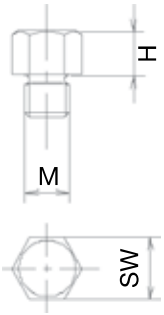

Item no.	Size	M	H	SW
289188 ●	**2**	M6	5	9
138950 ●	**2**	M6	10	9
725581 ●	**2**	M6	15	9

Soft segment top jaws, serration 90°

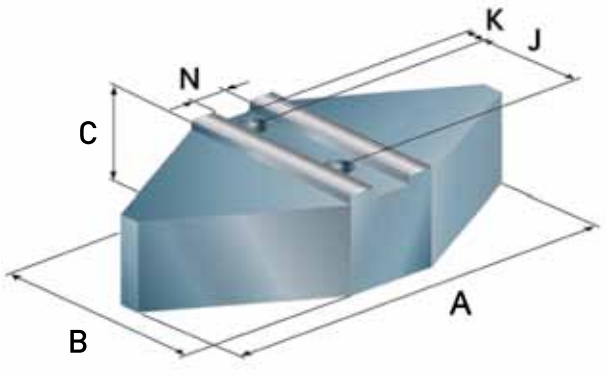

Design I

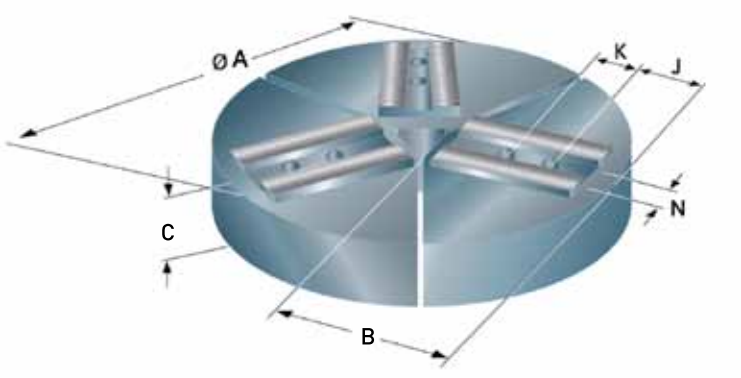

Design II

Tool group C 21
Type 9052 **Segment top jaws, 3 jaw set, can be hardened, serration $^{1}/_{16}$"x90°** - material: C15

Chuck Type	3-jaw set	A	B	C	N	K	J	Material	Design	Weight approx. kg
KFD 160/3; KFD-AF 160/3	**1032909** ■	120	60	60	17	15	22	steel	Design I	9
	1032910 ■	120	64	64	17	15	22	aluminium	Design I	3,2
	1032911 ■	169	76	76	17	21,5	22	steel	Design II	13
	1032912 ■	169	76	76	17	21,5	22	aluminium	Design II	4
KFD 200/3; KFD-AF 200/3; KFD-HE 210/3; KFD-HS 200/3; KFL 250/3; LVE 200/3	**1032913** ■	150	64	76	17	15	22	steel	Design I	14
	1032914 ■	150	64	76	17	15	22	aluminium	Design I	5
KFD 200/3; KFD-AF 200/3; KFD-HE 210/3; KFD-HS 200/3; KFD-HS 250/3; KFL 250/3; LVE 200/3	**1032915** ■	210	76	95	17	25	22	steel	Design II	21
	1032916 ■	210	76	95	17	25	22	aluminium	Design II	7
KFD-HS 250/3; KFL 250/3	**1032917** ■	170	64	89	17	20	22	steel	Design I	20
	1032918 ■	170	64	89	17	20	22	aluminium	Design I	7

● from stock ■ within 4 weeks

Soft segment top jaws, serration 60°

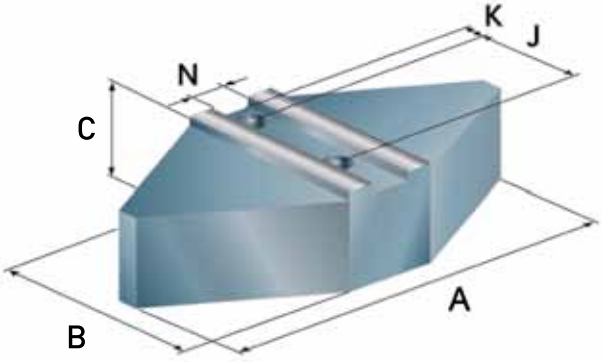

Design I

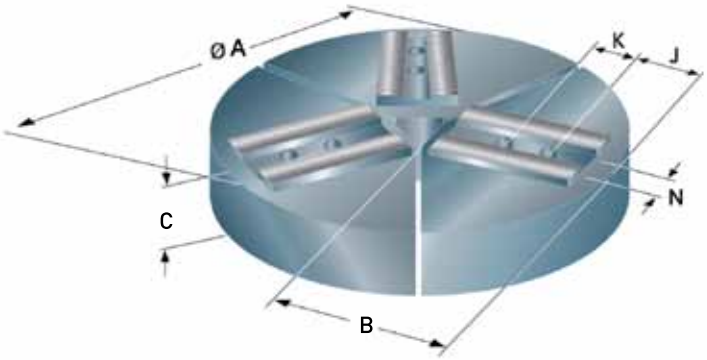

Design II

Tool group C 21
Type 9052 **Segment top jaws, 3 jaw set, can be hardened, serration 1,5x60° / 3x60°** - material: C15

Chuck Type	3-jaw set	A	B	C	N	K	J	Material	Design	Weight approx. kg
KFD-HE 170/3	**1032921** ■	120	60	60	12	15	20	steel	Design I	9
	1032922 ■	120	64	64	12	15	20	aluminium	Design I	3,2
	1032923 ■	169	76	76	12	20	20	steel	Design II	13
	1032924 ■	169	76	76	12	20	20	aluminium	Design II	4
KFD-HE 210/3	**1032925** ■	150	64	76	14	15	25	steel	Design I	14
	1032926 ■	150	64	76	14	15	25	aluminium	Design I	5
	1032927 ■	210	76	95	14	25,5	25	steel	Design II	20
	1032928 ■	210	76	95	14	25,5	25	aluminium	Design II	7
KFD-HE 254/3	**1032929** ■	170	64	89	16	20	30	steel	Design I	20
	1032930 ■	170	64	89	16	20	30	aluminium	Design I	7
	1032931 ■	254	76	111	16	27	30	steel	Design II	29
	1032932 ■	254	76	111	16	27	30	aluminium	Design II	10
KFD-HE 315/3; KFE 350/3; KFG 350/3; KFM 350/2; KFM 350/3	**1032937** ■	240	76	118	21	30	30	steel	Design I	28
	1032938 ■	240	76	118	21	30	30	aluminium	Design I	10
	1032939 ■	304	76	133	21	34	30	steel	Design II	41
	1032940 ■	304	76	133	21	34	30	aluminium	Design II	14

T-nuts for power chucks and stationary power chucks

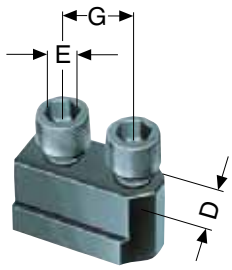

Tool group C 15
Type 538-00 **T-nuts**, without screw, for SV $^{1}/_{16}$" x 90°

Chuck Type	**Item no.**	Contents of delivery	D	E	G
KFD-HE 130/3	**154033** ●	piece	10	M8	14
KFD-HE 210/3	**157569**[1] ●	piece	17	M12	-

[1] single T-nut

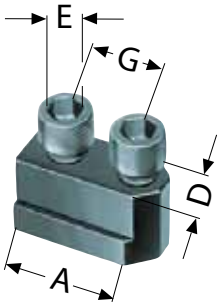

Tool group C 15
Type 549-00 **Extended T-nuts**, without screw

Chuck Type	**Item no.**	Contents of delivery	A	D	E	G
KFD-HS 110/3	**149471** ●	piece	30	10	M8	15
KFD-HS 130/3; KFD-HS 140/3	**298082** ●	piece	34	10	M6	2x12
KFD-HE 170/3; KFD-HS 160/3; KFD-HS 175/3; LVE 160/3; SSH 160/2; SSH 160/3; SSP 160/2; SSP 160/3	**343234** ●	piece	42	12	M8	2x15
KFD-HE 254/3; KFD-HE 315/3; KFD-HS 315/3; LVE 250/3; LVE 315/3; SSH 250/2; SSH 250/3; SSH 315/2; SSH 315/3; SSP 250/2; SSP 250/3; SSP 315/2; SSP 315/3	**135767**[1] ●	piece	46	21	M16	25
KFD-HS 250/3	**143595** ●	piece	36	17	M12	19
KFD-HS 400/3; KFD-HS 500/3	**135769** ●	piece	59	25,5	M 20	31

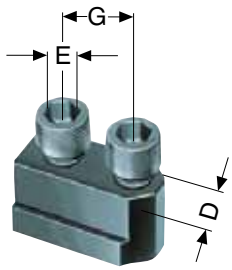

Tool group C 15
Type 440-90 **T-nuts**, without screw, for SV **1,5" x 60°**

Chuck Type	**Item no.**	Contents of delivery	D	E	G
KFD-HE 170/3	**154651** ●	piece	12	M10	20
KFD-HE 210/3	**154659** ●	piece	14	M12	25
KFD-HE 254/3	**154672** ●	piece	16	M12	30
KFD-HE 315/3	**155219** ●	piece	21	M16	30

T-nuts for power chucks and stationary power chucks

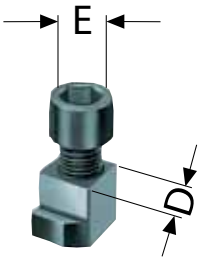

Tool group C 15
Type 538-00 **T-nuts**, without screw

Chuck Type	**Item no.**	Contents of delivery	D	E
KFD 110/3; KFD 125/3; KFD 140/3	**004254** ●	piece	10	M6
LVE 125/3	**041245**[1)] ●	piece	12	M8
KFD 130/3	**241673** ●	piece	12	M8
KFD-HS 200/3; LVE 200/3; SSH 200/2; SSH 200/3; SSP 200/2; SSP 200/3	**135765** ●	piece	17	M 12
KFD 160/3; KFD 200/3; KFD-EC 200/3; KFL 250/3	**241674** ●	piece	17	M12
KFD 250/3; KFD 315/3; KFD-EC 250/3; KFD-EC 315/3; KFL 315/3; KFL 400/3	**241675** ●	piece	21	M16
KFD 400/3; KFD 500/3; KFD 630/3; KFD 800/3; KFD-EC 400/3; KFD-HE 400/3; KFL 500/3; KFL 600/3	**241676**[1)] ●	piece	25,5	M20
KFD 1000/3; KFD 1250/3; KFD 1400/3; KFD 1600/3	**146801** ●	piece	30	M24

Single T-nut

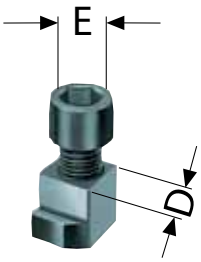

Tool group C 15
Type 530-05 **T-nuts**, without screw

Chuck Type	**Item no.**	Contents of delivery	D	E
KFM 130/2; KFM 130/3	**028311** ●	piece	11	M8
KFE 170/2; KFE 170/3; KFG 160/2; KFG 160/3; KFM 160/2; KFM 160/3	**029874** ●	piece	11	M8
KFE 215/2; KFE 215/3; KFG 215/2; KFG 215/3; KFM 215/2; KFM 215/3	**028329** ●	piece	14	M10
KFE 280/2; KFE 280/3; KFG 280/2; KFG 280/3; KFM 280/2; KFM 280/3	**009744** ■	piece	20	M12
KFE 350/2; KFE 350/3; KFG 350/2; KFG 350/3; KFM 350/2; KFM 350/3	**031051** ■	piece	21	M16

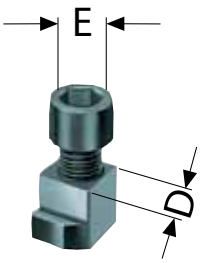

Tool group C 15
Type 525-00 **T-nuts**, without screw

Chuck Type	**Item no.**	Contents of delivery	D	E
LVE 400/3; LVE 500/3; LVE 600/3	**588960** ■	piece	25,5	M20
	169447 ■	piece	25,5	3/4-10 UNC
LVE 1000/3; LVE 600/3; LVE 700/3; LVE 800/3	**588770** ●	piece	30	M24
	169448 ■	piece	30	7/8-9 UNC

● from stock ■ within 4 weeks

Mounting bolts for top jaws

Tool group C 15
Type 0040-Y **Mounting screws**

Chuck Type	Item no.	Contents of delivery	Thread
KFE 170/2; KFE 170/3; KFG 160/2; KFG 160/3; KFM 130/2; KFM 130/3; KFM 160/2; KFM 160/3	**340015** ●	piece	M8x18
KFD 110/3; KFD 125/3; KFD 140/3; KFD-HS 130/3; KFD-HS 140/3	**343003** ●	piece	M6x18
KFE 215/2; KFE 215/3; KFG 215/2; KFG 215/3; KFM 215/2; KFM 215/3	**216594** ●	piece	M10x20
KFD 250/3; KFD 315/3; KFD-EC 250/3; KFD-EC 315/3; KFD-HE 254/3; KFD-HE 315/3; KFD-HS 315/3; KFL 315/3; KFL 400/3	**229157** ●	piece	M16x30
KFD-HE 130/3	**248149** ●	piece	M8x20
KFD-HE 170/3	**216588** ●	piece	M10x25
DURO-NCSE 500/3; DURO-NCSE 630/3; KFD-HE 400/3	**216569** ●	piece	M16x40
LVE 400/3; LVE 500/3; LVE 600/3	**243854** ●	piece	3/4-10 UNCx2
LVE 1000/3; LVE 600/3; LVE 700/3; LVE 800/3	**236514** ●	piece	M24x60
	680392 ●	piece	7/8-9 UNCx2-1/4

Cylindrical screw to DIN 912, 12.9

Tool group C15
Type 0040-Y **Jaw mounting bolt**, piece

Chuck Type	Item no.	Contents of delivery	Thread
DURO 125/3; DURO-T 125/3; ZG 160/3	**243893** ●	piece	M6x10
DURO 160/3; DURO 200/3; DURO A 160/3; DURO A 200/3; DURO-NC 140/3; DURO-NC 175/3; DURO-NC 200/3; DURO-T 160/3; DURO-T 200/3; ZG 160/3	**200182** ●	piece	M8x1x22
DURO 250/3; DURO A 250/3; DURO-NC 250/3; DURO-T 250/3; ZG 160/3	**200183** ●	piece	M12x1,5x30
DURO 315/3; DURO-NC 315/3; DURO-T 315/3; ZG 160/3	**202402** ●	piece	M12x1,5x35
DURO 400/3; DURO 500/3; DURO-NC 400/3; DURO-NC 500/3; DURO-T 400/3; DURO-T 500/3; ZG 160/3	**227618** ●	piece	M16x1,5x40
DURO 630/3; DURO-NC 630/3; DURO-T 630/3; LVE 400/3; LVE 500/3; LVE 600/3; ZG 160/3	**249388** ●	piece	M20x50

Mounting bolts for top jaws

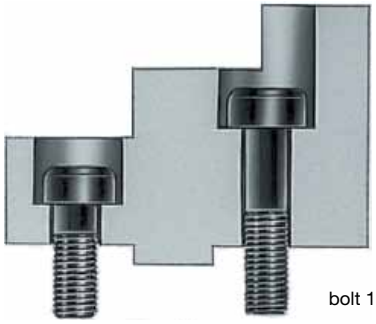

bolt 1

Tool group C15
Type 0040-Y **Mounting bolt for top jaws, bolt 1**

Chuck Type	Item no.	Contents of delivery	Thread
LVE 160/3; SSH 160/2; SSH 160/3; SSP 160/2; SSP 160/3; ZG 125/3; ZG 125/4; ZGF 125/2; ZG Hi-Tru 125/3; ZGU 125/3; ZGU 125/4; ZS 125/3; ZS 125/4; ZSU 125/3; ZSU 125/4	**236949** ●	piece	M8x25
ZG 315/3; ZG 315/4; ZGD 315/3; ZGF 315/2; ZG Hi-Tru 315/3; ZGU 315/3; ZGU 315/4; ZS 315/3; ZS 315/4; ZSU 315/3; ZSU 315/4	**233026** ●	piece	M12x45
ZG 500/3; ZG 500/4; ZG 630/3; ZG 630/4; ZGD 500/3; ZGU 500/3; ZGU 630/3; ZGU 630/4; ZS 500/3; ZS 500/4; ZS 630/3; ZS 630/4; ZSU 500/3; ZSU 630/3; ZSU 630/4	**249003** ●	piece	M20x80

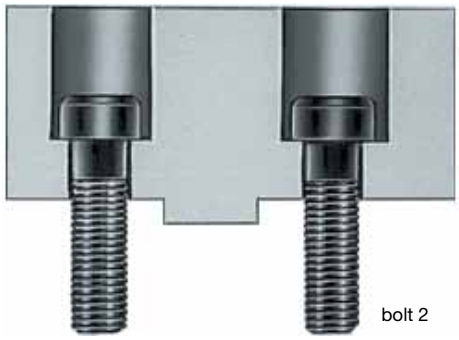

bolt 2

Tool group C15
Type 0040-Y **Mounting bolt for top jaws, bolt 2**

Chuck Type	Item no.	Contents of delivery	Thread
ZG 100/3; ZG 100/4; ZG 110/3; ZG 110/4; ZGF 100/2; ZG Hi-Tru 100/3; ZGU 100/3; ZGU 100/4; ZGU 110/3; ZGU 110/4; ZS 100/3; ZS 100/4; ZSU 100/3; ZSU 100/4	**216528** ●	piece	M6x16
DURO-NCSE 170/3; DURO-NCSE 210/3; DURO-NCSE 225/3; KFD 130/3; KFD-HE 170/3; KFD-HS 110/3; KFD-HS 160/3; KFD-HS 175/3; LVE 125/3; ZG 125/3; ZG 125/4; ZG 140/3; ZG 140/4; ZG 160/3; ZG 160/4; ZG 200/3; ZG 200/4; ZGD 200/3; ZGD 230/3; ZGF 125/2; ZGF 160/2; ZGF 200/2; ZG Hi-Tru 125/3; ZG Hi-Tru 160/3; ZG Hi-Tru 200/3; ZGU 125/3; ZGU 125/4; ZGU 140/3; ZGU 140/4; ZGU 160/3; ZGU 160/4; ZGU 200/3; ZGU 200/4; ZS 125/3; ZS 125/4; ZS 140/3; ZS 140/4; ZS 160/3; ZS 160/4; ZS 200/3; ZS 200/4; ZSU 125/3; ZSU 125/4; ZSU 140/3; ZSU 140/4; ZSU 160/3; ZSU 160/4; ZSU 200/3; ZSU 200/4	**233058** ●	piece	M8x20
KFD 160/3; KFD 200/3; KFD-EC 200/3; KFD-HE 210/3; KFD-HS 200/3; KFD-HS 250/3; KFL 250/3; ZG 250/3; ZG 250/4; ZGD 250/3; ZGD 270/3; ZGF 250/2; ZG Hi-Tru 250/3; ZGU 250/3; ZGU 250/4; ZS 250/3; ZS 250/4; ZSU 250/3; ZSU 250/4	**227692** ●	piece	M12x25
DURO-NCSE 265/3; DURO-NCSE 315/3; DURO-NCSE 400/3; KFD-HE 210/3; KFD-HE 254/3; KFD-HE 315/3; KFE 280/2; KFE 280/3; KFG 280/2; KFG 280/3; KFM 280/2; KFM 280/3; LVE 200/3; SSH 200/2; SSH 200/3; SSP 200/2; SSP 200/3; ZG 315/3; ZG 315/4; ZGD 315/3; ZGF 315/2; ZG Hi-Tru 315/3; ZGU 315/3; ZGU 315/4; ZS 315/3; ZS 315/4; ZSU 315/3; ZSU 315/4	**233030** ●	piece	M12x30
KFE 350/2; KFE 350/3; KFG 350/2; KFG 350/3; KFM 350/2; KFM 350/3; LVE 250/3; LVE 315/3; SSH 250/2; SSH 250/3; SSH 315/2; SSH 315/3; SSP 250/2; SSP 250/3; SSP 315/2; SSP 315/3; ZG 350/3; ZG 350/4; ZG 400/3; ZG 400/4; ZGD 400/3; ZGF 350/2; ZGF 400/2; ZGU 350/3; ZGU 350/4; ZGU 400/3; ZGU 400/4; ZS 350/3; ZS 350/4; ZS 400/3; ZS 400/4; ZSU 350/3; ZSU 350/4; ZSU 400/3; ZSU 400/4	**220564** ●	piece	M16x35
KFD 400/3; KFD 500/3; KFD 630/3; KFD 800/3; KFD-EC 400/3; KFD-HE 400/3; KFD-HS 400/3; KFD-HS 500/3; KFL 500/3; KFL 600/3; ZG 500/3; ZG 500/4; ZG 630/3; ZG 630/4; ZGD 500/3; ZGU 500/3; ZGU 500/4; ZGU 630/3; ZGU 630/4; ZS 500/3; ZS 500/4; ZS 630/3; ZS 630/4; ZSU 500/3; ZSU 500/4; ZSU 630/3; ZSU 630/4	**233047** ●	piece	M20x40
KFD 1000/3; KFD 1250/3; KFD 1400/3; KFD 1600/3	**249255** ●	piece	M24x70

Outward stepped jaw (inside jaw) BB, hardened

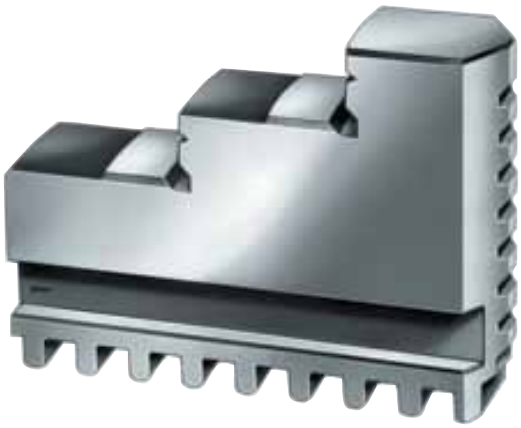

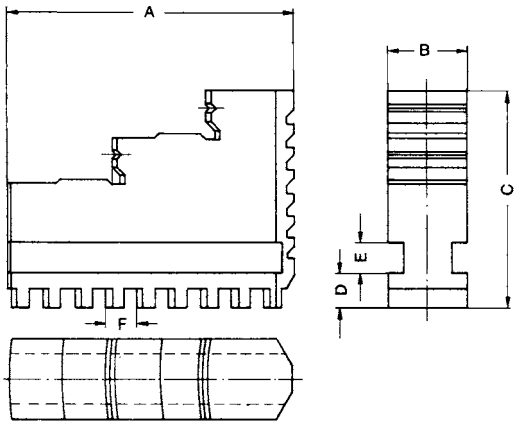

Tool group A09
Type 300 **Inside jaw BB DIN 6350, set,** outward stepped jaw, hardened

Chuck Type	3-jaw set	4-jaw set	Jaw length A	Jaw width B	Jaw height C	D	E	F	Weight approx. kg
KRF 70/3; ZG 74/3	**110154**[1] ●	**149305** ●	32	10	23	4,7	4	4,5	0,09
ZG 80/3; ZG 85/3; ZG Hi-Tru 80/3; ZS 80/3	**110155** ●	**110063** ●	37	12	26	4,8	4,5	4,5	0,05
KRF 110/3; ZG 100/3; ZG 110/3; ZG Hi-Tru 100/3; ZS 100/3	**110156** ●	**110064** ●	48	14	33,5	6,3	6	6,0	0,3
KRF 125/3; KRF 125/6; ZG 125/3; ZG Hi-Tru 125/3; ZS 125/3	**110157** ●	**110065** ●	52	18	41,5	7,3	7	6,0	0,6
ZG 140/3; ZS 140/3	**110158** ●	**110066** ●	61	18	41,5	8,3	7	6,0	0,22
KRF 160/3; KRF 160/6; ZG 160/3; ZG Hi-Tru 160/3; ZS 160/3	**110159** ●	**110067** ●	61	18	47,5	8,3	7	8,0	0,75
KRF 200/3; KRF 200/6; ZG 200/3; ZG Hi-Tru 200/3; ZS 200/3	**110160** ●	**110068** ●	69	20	53,5	8,3	8	8,0	0,9
KRF 250/6; ZG 250/3; ZG Hi-Tru 250/3; ZS 250/3	**110161** ●	**110069** ●	90	24	67,5	10,3	10	10,0	0,7
ZG 315/3; ZG Hi-Tru 315/3; ZS 315/3	**110162** ●	**110070** ●	130	34	79,5	11,3	15	10,0	1,8
ZG 350/3; ZG 400/3; ZS 350/3; ZS 400/3	**110163** ●	**110071** ●	130	34	79,5	11,3	15	10,0	1,8
ZG 500/3; ZG 630/3; ZS 500/3; ZS 630/3	**110164** ■	**110072** ●	190	42	95	14,9	15	10,0	3,8

[1] Reversible, for use as turning or inside jaws
Stepped and hardened jaws, supplied as supplement or as spares, must be ground on the chuck.
In case of a subsequent jaw delivery please send us the chuck.

Inward stepped jaws (outside jaws) DB, hardened

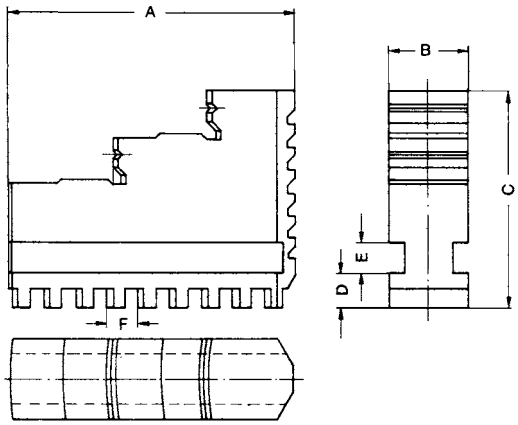

Tool group A09
Type 300 **Outside jaw DB DIN 6350, set**, inward stepped jaw, hardened

Chuck Type	3-jaw set	4-jaw set	Jaw length A	Jaw width B	Jaw height C	D	E	F	Weight approx. kg
ZG 80/3; ZG 85/3; ZG Hi-Tru 80/3; ZS 80/3	**110165** ●	**110073** ●	37	12	26	4,8	4,5	4,5	0,05
KRF 110/3; KRF 70/3; ZG 100/3; ZG 110/3; ZG Hi-Tru 100/3; ZS 100/3	**110166** ●	**110074** ●	48	14	33,5	6,3	6	6,0	0,3
KRF 125/3; KRF 125/6; ZG 125/3; ZG Hi-Tru 125/3; ZS 125/3	**110167** ●	**110075** ●	52	18	41,5	7,3	7	6,0	0,6
ZG 140/3; ZS 140/3	**110168** ●	**110076** ●	61	18	41,5	8,3	7	6,0	0,22
KRF 160/3; KRF 160/6; ZG 160/3; ZG Hi-Tru 160/3; ZS 160/3	**110169** ●	**110077** ●	61	18	47,5	8,3	7	8,0	0,75
KRF 200/3; KRF 200/6; ZG 200/3; ZG Hi-Tru 200/3; ZS 200/3	**110170** ●	**110078** ●	69	20	53,5	8,3	8	8,0	0,9
KRF 250/6; ZG 250/3; ZG Hi-Tru 250/3; ZS 250/3	**110171** ●	**110079** ●	90	24	67,5	10,3	10	10,0	0,7
ZG 315/3; ZG Hi-Tru 315/3; ZS 315/3	**110016** ●	**110080** ●	130	34	79,5	11,3	15	10,0	1,8
ZG 350/3; ZG 400/3; ZS 350/3; ZS 400/3	**110017** ●	**110081** ●	130	34	79,5	11,3	15	10,0	1,8
ZG 500/3; ZG 630/3; ZS 500/3; ZS 630/3	**110018** ■	**110082** ■	190	42	95	14,9	15	10,0	3,8

Stepped and hardened jaws, supplied as supplement or as spares, must be ground on the chuck.
In case of a subsequent jaw delivery please send us the chuck.

Unstepped jaws (soft block jaws) BL, can be hardened

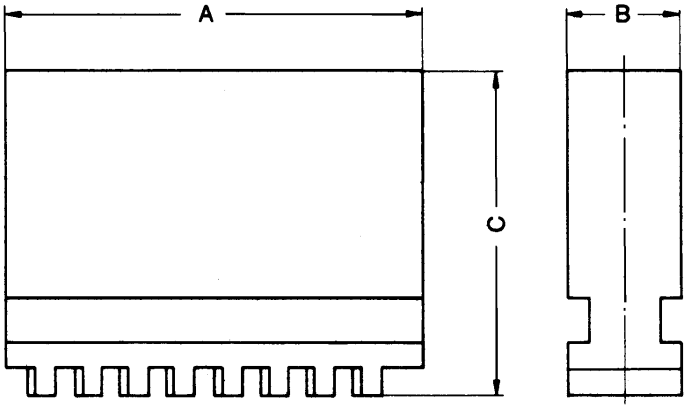

Tool group A09
Type 301 **Unstepped jaw BL DIN 6350, set**, unstepped, soft, 16MnCr5

Chuck Type	3-jaw set	4-jaw set	Jaw length A	Jaw width B	Jaw height C	F	Weight approx. kg
KRF 70/3; ZG 74/3	**109114**[1] ●	**149304** ●	32	10	23	4,5	0,15
ZG 80/3; ZG 85/3; ZG Hi-Tru 80/3; ZS 80/3	**107588** ●	**107598** ●	37	12	26	4,5	0,08
KRF 110/3; ZG 100/3; ZG 110/3; ZG Hi-Tru 100/3; ZS 100/3	**107589** ●	**107599** ●	48	14	33,5	6,0	0,45
KRF 125/3; KRF 125/6; ZG 125/3; ZG Hi-Tru 125/3; ZS 125/3	**107590** ●	**107600** ●	52	18	41,5	6,0	0,81
ZG 140/3; ZS 140/3	**107591** ●	**107601** ●	61	18	41,5	6,0	0,32
KRF 160/3; KRF 160/6; ZG 160/3; ZG Hi-Tru 160/3; ZS 160/3	**107592** ●	**107602** ●	61	18	47,5	8,0	1,14
KRF 200/3; KRF 200/6; ZG 200/3; ZG Hi-Tru 200/3; ZS 200/3	**107593** ●	**107603** ●	69	20	53,5	8,0	1,56
KRF 250/6; ZG 250/3; ZG Hi-Tru 250/3; ZS 250/3	**107594** ●	**107604** ●	90	24	67,5	10,0	1
ZG 315/3; ZG Hi-Tru 315/3; ZS 315/3	**107595** ●	**107605** ●	130	34	79,5	10,0	2,4
ZG 350/3; ZG 400/3; ZS 350/3; ZS 400/3	**107596** ●	**107644** ●	130	34	79,5	10,0	2,4
ZG 500/3; ZG 630/3; ZS 500/3; ZS 630/3	**107597** ●	**107645** ●	190	42	95	10,0	5,2

[1] jaws reversible

Base jaws GB, hardened

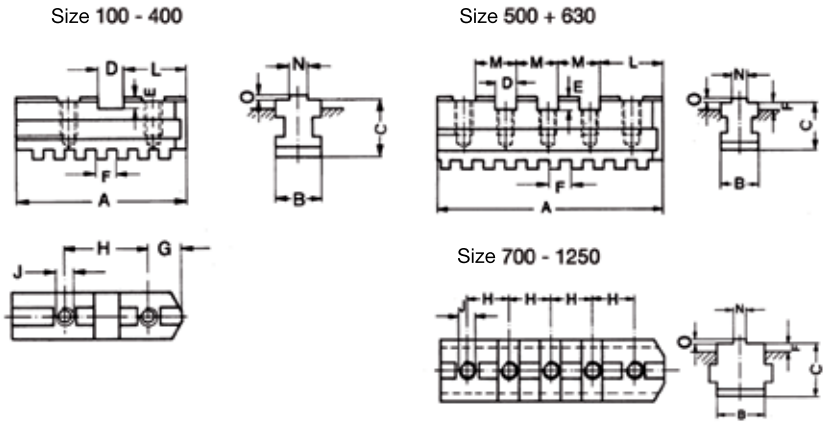

Tool group A09
Type 302 **Base jaw GB DIN 6350, set,** with fixing screw

Chuck Type	3-jaw set	4-jaw set	Jaw length A	Jaw width B	C	D	E	F	H	J metr.	J UNC	L	M	N	O	Grooves	Tapped holes	Weight approx. kg
ZG 100/3; ZG 110/3; ZG Hi-Tru 100/3; ZGU 100/3; ZGU 110/3; ZS 100/3; ZSU 100/3	**107500** ●	**107542** ●	46	14	19,5	9,5	6	6,0	24	M6	¼”-20	19,25	-	7,94	2,5	1	2	0,06
ZG 125/3; ZG Hi-Tru 125/3; ZGU 125/3; ZS 125/3; ZSU 125/3	**107501** ●	**107543** ●	55	18	24	12,68	7,6	6,0	32	M8	5/16”-18	22,6	-	7,94	3,1	1	2	0,12
ZG 140/3; ZGU 140/3; ZS 140/3; ZSU 140/3	**107502** ●	**107544** ●	65	18	27	12,68	7,6	6,0	38,1	M8	3/8”-16	28,5	-	7,94	3,1	1	2	0,17
ZG 160/3; ZG Hi-Tru 160/3; ZGU 160/3; ZS 160/3; ZSU 160/3	**107503** ●	**107545** ●	65	18	27	12,68	7,6	8,0	38,1	M8	3/8”-16	28,5	-	7,94	3,1	1	2	0,17
ZG 200/3; ZG Hi-Tru 200/3; ZGU 200/3; ZS 200/3; ZSU 200/3	**107504** ●	**107546** ●	78	20	28	12,68	7,6	8,0	44,45	M8	3/8”-16	34,9	-	7,94	3,1	1	2	0,22
ZG 250/3; ZG Hi-Tru 250/3; ZGU 250/3; ZS 250/3; ZSU 250/3	**107505** ●	**107547** ●	92	24	35	19,03	7,6	10,0	54	M12	½”-13	39,7	-	12,7	3,1	1	2	0,4
ZG 315/3; ZG Hi-Tru 315/3; ZGU 315/3; ZS 315/3; ZSU 315/3	**107506** ●	**107548** ●	108	34	40	19,03	7,6	10,0	63,5	M12	½”-13	47,6	-	12,7	3,1	1	2	0,78
ZG 350/3; ZG 400/3; ZGU 350/3; ZGU 400/3; ZS 350/3; ZS 400/3; ZSU 350/3; ZSU 400/3	**107507** ●	**107549** ●	127	34	45	19,03	10,8	10,0	76,2	M16	5/8”-11	57,1	-	12,7	3,1	1	2	1
ZG 500/3; ZGU 500/3; ZS 500/3; ZSU 500/3	**107508** ●	**107550** ●	165	42	49	19,03	10,8	10,0	38,1	M20	¾”-10	57,1	38,1	12,7	3,1	2	4	1,72
ZG 630/3; ZGU 630/3; ZS 630/3; ZSU 630/3	**107509** ●	**107551** ●	203	42	49	19,03	10,8	10,0	38,1	M20	¾”-10	57,1	38,1	12,7	3,1	3	5	2,1
ZGU 700/3; ZSU 700/3	**115098** ■	**141621** ■	253	55	62	19,03	10,8	20,0	38,1	¾”-10	M20	57,1	38,1	12,7	3,1	4	6	6,2
ZGU 800/3; ZSU 800/3	**105272** ■	**141616** ■	291	55	62	19,03	10,8	20,0	38,1	¾”-10	M20	57,1	38,1	12,7	3,1	5	7	7,1
ZGU 1000/3; ZSU 1000/3	**105274** ■	**141611** ■	329	55	62	19,03	10,8	20,0	38,1	¾”-10	M20	57,1	38,1	12,7	3,1	6	8	8
ZGU 1250/3; ZSU 1250/3	**105275** ■	**141614** ■	367	55	62	19,03	10,8	20,0	38,1	¾”-10	M20	57,1	38,1	12,7	3,1	7	9	9

● from stock ■ within 4 weeks

Reversible top jaws UB, hardened

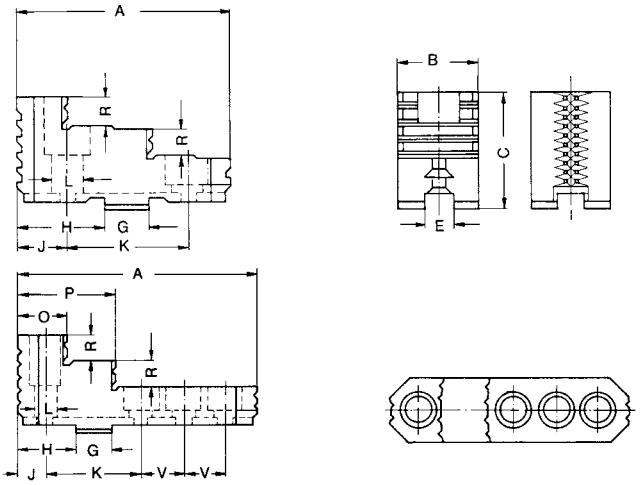

Tool group A09
Type 303 **Reversible top jaws UB DIN 6350, set**, hardened

Chuck Type	3-jaw set	4-jaw set	Jaw length A	Jaw width B	Jaw height C	E	G	H	J	K	R	Weight approx. kg
ZG 100/3; ZG 110/3; ZG Hi-Tru 100/3; ZGU 100/3; ZGU 110/3; ZS 100/3; ZSU 100/3	**108045** ■	**108053** ■	47	22	29,5	7,96	9,5	19,25	12	24	6	0,12
ZG 125/3; ZG Hi-Tru 125/3; ZGU 125/3; ZS 125/3; ZSU 125/3	**108046** ■	**108054** ■	56	26	37,5	7,96	12,68	22,6	13	32	8	0,19
ZG 140/3; ZG 160/3; ZG Hi-Tru 160/3; ZGU 140/3; ZGU 160/3; ZS 140/3; ZS 160/3; ZSU 140/3; ZSU 160/3	**107936** ●	**107938** ●	66,7	28	41,5	7,96	12,68	28,5	15,8	38,1	9[1] / 10,5[2]	0,27
ZG 200/3; ZGD 200/3; ZG Hi-Tru 200/3; ZGU 200/3; ZS 200/3; ZSU 200/3	**107937** ●	**107939** ●	79,5	30	42,5	7,96	12,68	34,9	19	44,45	9[1] / 10,5[2]	0,39
ZG 250/3; ZGD 250/3; ZG Hi-Tru 250/3; ZGU 250/3; ZS 250/3; ZSU 250/3	**108049** ●	**108057** ●	95,3	36	52,5	12,72	19,03	39,7	22,2	53,95	14	0,66
ZG 315/3; ZGD 315/3; ZG Hi-Tru 315/3; ZGU 315/3; ZS 315/3; ZSU 315/3	**108050** ●	**108058** ●	109,5	42	57,5	12,72	19,03	47,6	25,4	63,5	15	1,02
ZG 350/3; ZG 400/3; ZGD 400/3; ZGU 350/3; ZGU 400/3; ZS 350/3; ZS 400/3; ZSU 350/3; ZSU 400/3	**108051** ●	**108059** ●	127	42	64,5	12,72	19,03	57,1	28,5	76,2	15	1,27
ZG 500/3; ZG 630/3; ZGD 500/3; ZGU 500/3; ZGU 630/3; ZS 500/3; ZS 630/3; ZSU 500/3; ZSU 630/3	**108052** ■	**108060** ■	127	50	79,5	12,72	19,03	57,1	28,5	76,2	20	2
ZGU 700/3; ZGU 800/3; ZSU 700/3; ZSU 800/3	**105081** ■	**105085** ■	210	68	89	12,72	19,03	57,1	28,5	76,2	22	4,45
ZGU 1000/3; ZGU 1250/3; ZSU 1000/3; ZSU 1250/3	**105098** ■	**105101** ■	210	68	110	12,72	19,03	57,1	28,5	76,2	25	6,1

[1] with M8
[2] with $^3/_8$" mounting dimensions to ISO 3442
Stepped and hardened jaws, supplied as supplement or as spares, must be ground on the chuck.
In case of a subsequent jaw delivery please send us the chuck.

Soft top jaws AB

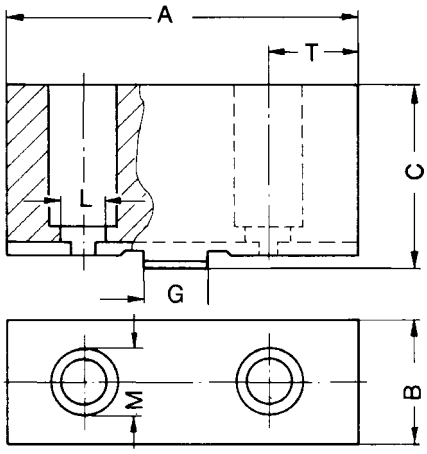

Tool group A09
Type 302 **Unstepped top jaw AB DIN 6350, set**, soft, material 16MnCr5

Chuck Type	3-jaw set	4-jaw set	Jaw length A	Jaw width B	Jaw height C	G	L	T	Weight approx. kg
ZG 100/3; ZG 110/3; ZG Hi-Tru 100/3; ZGU 100/3; ZGU 110/3; ZS 100/3; ZSU 100/3	**107633** ●	**107641** ●	53	22,5	30	9,5	6,6	15	0,21
ZG 125/3; ZG Hi-Tru 125/3; ZGU 125/3; ZS 125/3; ZSU 125/3	**107634** ●	**107642** ●	62	26,5	38	12,68	9	16	0,34
ZG 140/3; ZG 160/3; ZG Hi-Tru 160/3; ZGU 140/3; ZGU 160/3; ZS 140/3; ZS 160/3; ZSU 140/3; ZSU 160/3	**108581** ●	**108583** ●	74	28,5	42	12,68	9	19,5	0,5
ZG 200/3; ZGD 200/3; ZG Hi-Tru 200/3; ZGU 200/3; ZS 200/3; ZSU 200/3	**108582** ●	**108584** ●	87	30,5	43	12,68	9	22,8	0,7
ZG 250/3; ZGD 250/3; ZG Hi-Tru 250/3; ZGU 250/3; ZS 250/3; ZSU 250/3	**107637** ●	**107579** ●	103	36,5	53	19,03	14	26	1,2
ZG 315/3; ZGD 315/3; ZG Hi-Tru 315/3; ZGU 315/3; ZS 315/3; ZSU 315/3	**107638** ●	**107580** ●	120	42,5	58	19,03	14	30,7	1,86
ZG 350/3; ZG 400/3; ZGD 400/3; ZGU 350/3; ZGU 400/3; ZS 350/3; ZS 400/3; ZSU 350/3; ZSU 400/3	**107639** ●	**107581** ●	137	42,5	65	19,03	18	33,55	2,18
ZG 500/3; ZG 630/3; ZGD 500/3; ZGU 500/3; ZGU 630/3; ZS 500/3; ZS 630/3; ZSU 500/3; ZSU 630/3	**107640** ●	**107582** ●	140	50,5	80	19,03	22	35	3,04
ZGU 700/3; ZGU 800/3; ZSU 700/3; ZSU 800/3	**105103** ■	**105105** ■	210	68	89	19,03	22	41,5	8
ZGU 1000/3; ZGU 1250/3; ZSU 1000/3; ZSU 1250/3	**105107** ●	**105109** ●	210	68	110	19,03	22	41,5	10,8

Block jaws in extended design, can be hardened

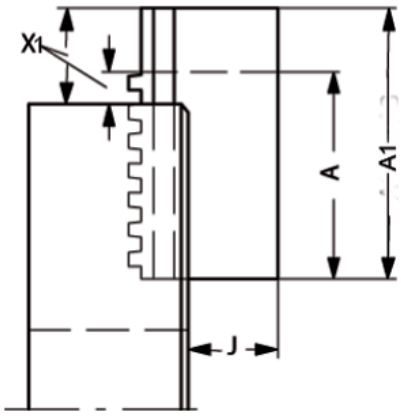

Tool group A09
Type 301 **Block jaws BL, set, in extended design**, soft, 16MnCr5, DIN 6350

Chuck Type	3-jaw set	4-jaw set	Jaw length A1	X1 max.	Length standard jaw A	J	X max.
ZG 200/3; ZG Hi-Tru 200/3; ZS 200/3	**130031** ■	**137073** ■	100	50	69	32,5	19
ZG 250/3; ZG Hi-Tru 250/3; ZS 250/3	**132658** ■	**137074** ■	120	56	90	41	26
ZG 315/3; ZG Hi-Tru 315/3; ZS 315/3	**132184** ■	**129894** ■	160	70	130	46	40
ZG 350/3; ZG 400/3; ZS 350/3; ZS 400/3	**137075** ■	**130442** ■	160	70	130	42	40
ZG 500/3; ZG 630/3; ZS 500/3; ZS 630/3	**131540** ■	**137076** ■	220	80	190	55	50
ZG 200/3; ZG Hi-Tru 200/3; ZS 200/3	**130033** ■	**137077** ■	120	70	69	32,5	19
ZG 250/3; ZG Hi-Tru 250/3; ZS 250/3	**128880** ■	**130610** ■	140	76	90	41	26
ZG 315/3; ZG Hi-Tru 315/3; ZS 315/3	**118908** ■	**137078** ■	200	110	130	46	40
ZG 350/3; ZG 400/3; ZS 350/3; ZS 400/3	**137079** ■	**137080** ■	200	110	130	42	40
ZG 500/3; ZG 630/3; ZS 500/3; ZS 630/3	**137081** ■	**137082** ■	280	140	190	55	50
ZG 315/3; ZG Hi-Tru 315/3; ZS 315/3	**121367** ■	**133691** ■	250	160	130	46	40
ZG 350/3; ZG 400/3; ZS 350/3; ZS 400/3	**137087** ■	**137088** ■	250	160	130	42	40

Block jaws in heightened design, can be hardened

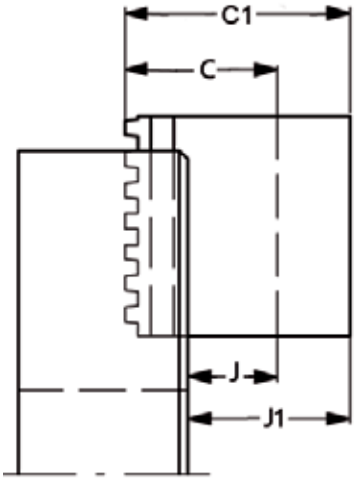

Tool group A09
Type 301 **Block jaws BL, set, in heightened design**, soft, 16MnCr5, DIN 6350

Chuck Type	3-jaw set	4-jaw set	Jaw heigth C1	J1	Height standard jaw C	J
ZG 200/3; ZG Hi-Tru 200/3; ZS 200/3	**125710** ■	**132972** ■	80	58,5	54	32,5
ZG 250/3; ZG Hi-Tru 250/3; ZS 250/3	**122188** ■	**134796** ■	100	73	68	41
ZG 315/3; ZG Hi-Tru 315/3; ZS 315/3	**132186** ■	**137091** ■	110	76	80	46
ZG 350/3; ZG 400/3; ZS 350/3; ZS 400/3	**137092** ■	**131655** ■	110	72	80	42
ZG 500/3; ZG 630/3; ZS 500/3; ZS 630/3	**137093** ■	**137094** ■	150	110	95	55
ZG 200/3; ZG Hi-Tru 200/3; ZS 200/3	**125712** ■	**137095** ■	120	98,5	54	32,5
ZG 250/3; ZG Hi-Tru 250/3; ZS 250/3	**122189** ■	**130630** ■	130	103	68	41
ZG 315/3; ZG Hi-Tru 315/3; ZS 315/3	**137096** ■	**137097** ■	140	106	80	46
ZG 350/3; ZG 400/3; ZS 350/3; ZS 400/3	**137098** ■	**137099** ■	140	102	80	42
ZG 500/3; ZG 630/3; ZS 500/3; ZS 630/3	**125117** ■	**137100** ■	200	160	95	55
ZG 200/3; ZG Hi-Tru 200/3; ZS 200/3	**125714** ■	**137101** ■	150	128,5	54	32,5
ZG 250/3; ZG Hi-Tru 250/3; ZS 250/3	**137102** ■	**137103** ■	150	123	68	41
ZG 315/3; ZG 315/4; ZG Hi-Tru 315/3; ZS 315/3	**137104** ■	**130340** ■	160	126	80	46
ZG 350/3; ZG 350/4; ZG 400/3; ZG 400/4; ZS 350/3; ZS 400/3	**132879** ■	**110109** ■	160	122	80	42

Top jaws in extended design, can be hardened

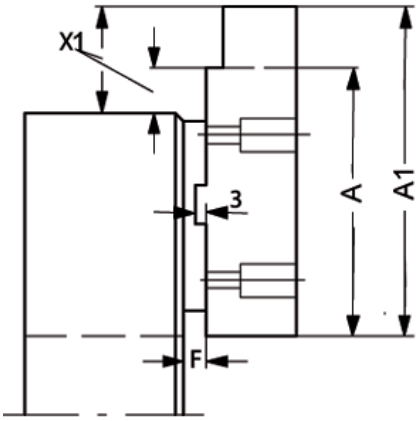

Tool group A09
Type 302 **Top jaws AB, set, in extended design**, soft, 16MnCr5, DIN 6350

Chuck Type	3-jaw set	4-jaw set	Jaw length A1	X1 max.	F	Length standard jaw A	X max.
ZG 200/3; ZG Hi-Tru 200/3; ZGU 200/3; ZS 200/3; ZSU 200/3	**110086** ■	**148139** ■	100	43	6,8	87	30
ZG 250/3; ZG Hi-Tru 250/3; ZGU 250/3; ZS 250/3; ZSU 250/3	**112122** ■	**129289** ■	130	63	8	103	36
ZG 315/3; ZG Hi-Tru 315/3; ZGU 315/3; ZS 315/3; ZSU 315/3	**110624** ■	**143764** ■	160	76	5,5	120	36
ZG 350/3; ZG 400/3; ZGU 350/3; ZGU 400/3; ZS 350/3; ZS 400/3; ZSU 350/3; ZSU 400/3	**110626** ■	**141277** ■	160	53	8,5	137	30
ZG 500/3; ZG 630/3; ZGU 500/3; ZGU 630/3; ZS 500/3; ZS 630/3; ZSU 500/3; ZSU 630/3	**103014** ■	**103393** ■	170	75	8,5	140	45
ZG 200/3; ZG Hi-Tru 200/3; ZGU 200/3; ZS 200/3; ZSU 200/3	**112120** ■	**148657** ■	120	63	6,8	87	30
ZG 250/3; ZG Hi-Tru 250/3; ZGU 250/3; ZS 250/3; ZSU 250/3	**125428** ■	**128700** ■	150	83	8	103	36
ZG 315/3; ZG Hi-Tru 315/3; ZGU 315/3; ZS 315/3; ZSU 315/3	**112091** ■	**147754** ■	200	116	5,5	120	36
ZG 350/3; ZG 400/3; ZGU 350/3; ZGU 400/3; ZS 350/3; ZS 400/3; ZSU 350/3; ZSU 400/3	**112118** ■	**141263** ■	200	93	8,5	137	30
ZG 500/3; ZG 630/3; ZGU 500/3; ZGU 630/3; ZS 500/3; ZS 630/3; ZSU 500/3; ZSU 630/3	**110632** ■	**148234** ■	220	125	8,5	140	45
ZG 250/3; ZG Hi-Tru 250/3; ZGU 250/3; ZS 250/3; ZSU 250/3	**104710** ■	**146013** ■	180	113	8	103	36
ZG 315/3; ZG Hi-Tru 315/3; ZGU 315/3; ZS 315/3; ZSU 315/3	**112089** ■	**147860** ■	250	166	5,5	120	36
ZG 350/3; ZG 400/3; ZGU 350/3; ZGU 400/3; ZS 350/3; ZS 400/3; ZSU 350/3; ZSU 400/3	**103654** ■	**149974** ■	260	153	8,5	137	30
ZG 500/3; ZG 630/3; ZGU 500/3; ZGU 630/3; ZS 500/3; ZS 630/3; ZSU 500/3; ZSU 630/3	**112127** ■	**148235** ■	280	185	8,5	140	45

● from stock ■ within 4 weeks

Top jaws in heightened design, can be hardened

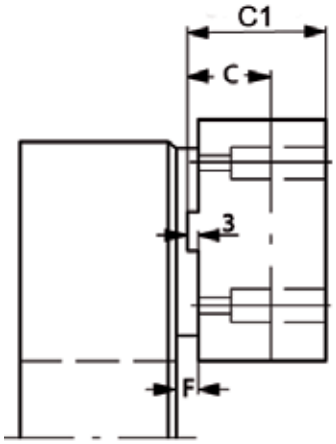

Tool group A09
Type 302 **Top jaws AB, set, in heigthened design**, soft, 16MnCr5, DIN 6350

Chuck Type	3-jaw set	4-jaw set	Jaw height C1	Height standard jaw C	F
ZG 200/3; ZG Hi-Tru 200/3; ZGU 200/3; ZS 200/3; ZSU 200/3	**132155** ■	**132181** ■	60	43	6,8
ZG 250/3; ZG Hi-Tru 250/3; ZGU 250/3; ZS 250/3; ZSU 250/3	**119645** ■	**135867** ■	70	53	8
ZG 315/3; ZG Hi-Tru 315/3; ZGU 315/3; ZS 315/3; ZSU 315/3	**110435** ■	**149975** ■	80	58	5,5
ZG 350/3; ZG 400/3; ZGU 350/3; ZGU 400/3; ZS 350/3; ZS 400/3; ZSU 350/3; ZSU 400/3	**126385** ■	**118373** ■	90	65	8,5
ZG 500/3; ZG 630/3; ZGU 500/3; ZGU 630/3; ZS 500/3; ZS 630/3; ZSU 500/3; ZSU 630/3	**128590** ■	**149985** ■	100	80	8,5
ZG 200/3; ZG Hi-Tru 200/3; ZGU 200/3; ZS 200/3; ZSU 200/3	**128564** ■	**149976** ■	80	43	6,8
ZG 250/3; ZG Hi-Tru 250/3; ZGU 250/3; ZS 250/3; ZSU 250/3	**128571** ■	**134999** ■	100	53	8
ZG 315/3; ZG Hi-Tru 315/3; ZGU 315/3; ZS 315/3; ZSU 315/3	**110437** ■	**129691** ■	110	58	5,5
ZG 350/3; ZG 400/3; ZGU 350/3; ZGU 400/3; ZS 350/3; ZS 400/3; ZSU 350/3; ZSU 400/3	**110628** ■	**135426** ■	120	65	8,5
ZG 500/3; ZG 630/3; ZGU 500/3; ZGU 630/3; ZS 500/3; ZS 630/3; ZSU 500/3; ZSU 630/3	**110630** ■	**149977** ■	130	80	8,5
ZG 250/3; ZG Hi-Tru 250/3; ZGU 250/3; ZS 250/3; ZSU 250/3	**128573** ■	**149978** ■	150	53	8
ZG 315/3; ZG Hi-Tru 315/3; ZGU 315/3; ZS 315/3; ZSU 315/3	**128569** ■	**141671** ■	150	58	5,5
ZG 350/3; ZG 400/3; ZGU 350/3; ZGU 400/3; ZS 350/3; ZS 400/3; ZSU 350/3; ZSU 400/3	**128567** ■	**139591** ■	160	65	8,5
ZG 500/3; ZG 630/3; ZGU 500/3; ZGU 630/3; ZS 500/3; ZS 630/3; ZSU 500/3; ZSU 630/3	**128588** ■	**140427** ■	160	80	8,5

Top jaws in heightened and wide design, can be hardened

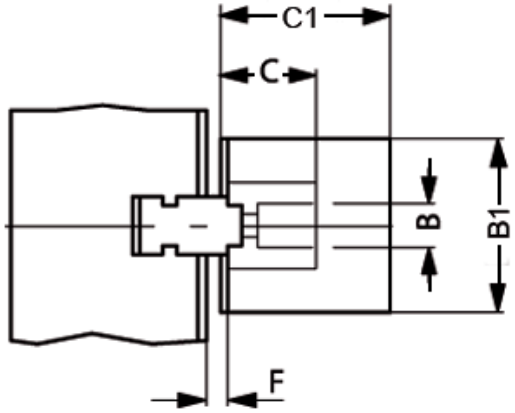

Tool group A09
Type 302 **Top jaws AB, set, in heightened and wide design,** soft, 16MnCr5, DIN 6350

Chuck Type	3-jaw set	4-jaw set	Jaw width B1	C1	Width standard jaw B	C
ZG 200/3; ZG Hi-Tru 200/3; ZGU 200/3; ZS 200/3; ZSU 200/3	**105057** ■	**105061** ■	40	70	30.5	43
ZG 250/3; ZG Hi-Tru 250/3; ZGU 250/3; ZS 250/3; ZSU 250/3	**137090** ■	**141338** ■	50	80	36.5	53
ZG 315/3; ZG Hi-Tru 315/3; ZGU 315/3; ZS 315/3; ZSU 315/3	**143053** ■	**149979** ■	60	90	42	58
ZG 350/3; ZG 400/3; ZGU 350/3; ZGU 400/3; ZS 350/3; ZS 400/3; ZSU 350/3; ZSU 400/3	**131567** ■	**149980** ■	60	90	42.5	65
ZG 500/3; ZG 630/3; ZGU 500/3; ZGU 630/3; ZS 500/3; ZS 630/3; ZSU 500/3; ZSU 630/3	**137084** ■	**149981** ■	80	110	50.5	80
ZG 200/3; ZG Hi-Tru 200/3; ZGU 200/3; ZS 200/3; ZSU 200/3	**133259** ■	**149982** ■	50	80	30.5	43
ZG 250/3; ZG Hi-Tru 250/3; ZGU 250/3; ZS 250/3; ZSU 250/3	**133653** ■	**137526** ■	60	90	36.5	53
ZG 315/3; ZG Hi-Tru 315/3; ZGU 315/3; ZS 315/3; ZSU 315/3	**143057** ■	**149983** ■	80	110	42	58
ZG 350/3; ZG 400/3; ZGU 350/3; ZGU 400/3; ZS 350/3; ZS 400/3; ZSU 350/3; ZSU 400/3	**137086** ■	**149984** ■	80	110	42.5	65

● from stock ■ within 4 weeks

Reversible top jaws UB, hardened for EG-ES

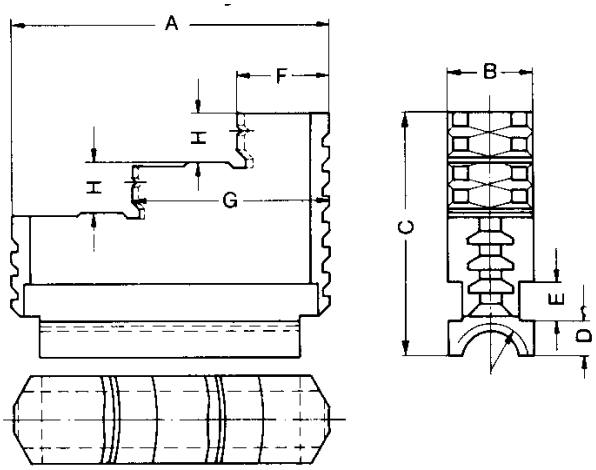

Tool group A09
Type 350 **Reversible top jaws UB, set,** hardened

Chuck Type	3-jaw set	4-jaw set	Jaw length A	Jaw width B	Jaw height C	D	E	G	H	J metr.	Weight approx. kg
EG 100/3; EG 125/3	**110117** ■	**110123** ■	56	18	41,5	8,7	7	35	8	Tr14x3	0,18
EG 160/3; ES 160/3	**110118** ■	**110124** ■	69	20	50	9,7	8	43	10	Tr16x4	0,3
EG 200/3; EG 200/4; ES 200/3	**139666** ■	**139670** ■	85	24	57,5	9,7	10	54	12	Tr18x2	0,53
EG 250/3; ES 250/3	**139667** ■	**139671** ■	90	24	67,5	9,7	10	56	14	Tr18x2	0,7
EG 315/3; EG 400/3; ES 315/3; ES 400/3	**139668** ■	**139672** ■	130	34	79,5	11,15	15	85	15	Tr20x2	1,7
EG 500/3; EG 630/3; ES 500/3; ES 630/3	**139669** ■	**139673** ■	190	42	95	15	15	120	20	Tr26x3	3,7

Unstepped jaws (soft block jaws) BL, can be hardened for EG-ES

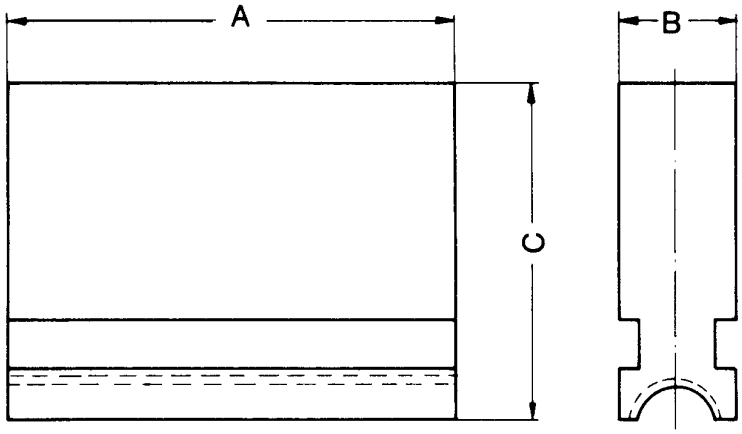

Tool group A09
Type 351 **Unstepped jaws BL, set,** unstepped, soft

Chuck Type	3-jaw set	4-jaw set	Jaw length A	Jaw width B	Jaw height C	J metr.	Weight approx. kg
EG 100/3; EG 125/3	**107668** ■	**107674** ■	56	18	41,5	Tr14x3	0,18
EG 160/3; ES 160/3	**107669** ■	**107675** ■	69	20	50	Tr16x4	0,3
EG 200/3; EG 200/4; ES 200/3	**139674** ■	**139678** ■	85	24	57,5	Tr18x2	0,53
EG 250/3; ES 250/3	**139675** ■	**139679** ■	90	24	67,5	Tr18x2	0,7
EG 315/3; EG 400/3; ES 315/3; ES 400/3	**139676** ■	**139680** ■	130	34	79,5	Tr20x2	1,7
EG 500/3; EG 630/3; ES 500/3; ES 630/3	**139677** ■	**139681** ■	190	42	95	Tr26x3	3,7

● from stock ■ within 4 weeks

Base jaws GB, hardened for EG-ES

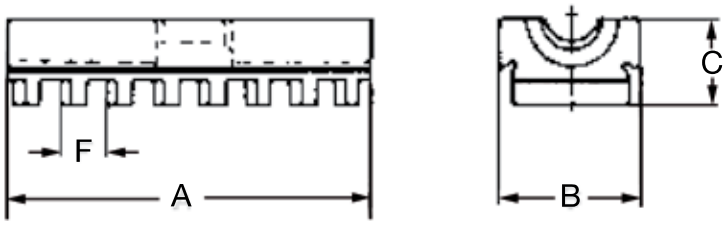

Tool group A09
Type 350 **Base jaws GB, set,** hardened

Chuck Type	3-jaw set	4-jaw set	Jaw length A	Jaw width B	Jaw height C	F
EG 100/3	**107652** ■	**107660** ■	50	24	13,3	6,0
EG 125/3	**107653** ■	**107661** ■	50	24	13,3	6,0
EG 160/3; ES 160/3	**107654** ■	**107662** ■	62	26	15,3	8,0
EG 200/3; EG 200/4; ES 200/3	**139682** ●	**139686** ●	78	30	17,8	8,0
EG 250/3; ES 250/3	**139683** ■	**139687** ■	86	30	17,8	10,0
EG 315/3; ES 315/3	**139684** ■	**139688** ■	118	44	22,7	10,0
EG 400/3; ES 400/3	**139685** ■	**139689** ■	118	44	22,7	10,0
EG 500/3; EG 630/3; ES 500/3; ES 630/3	**107659** ■	**107667** ■	176	54	25	10,0

In this jaw-catalogue RÖHM presents the comprehensive clamping jaw program. A large number of jaw types offer nearly all possibilities of clamping in lathe chucks, independent chucks and power chucks for both, the industrial and the artisan production.

Find your clamping jaw quickly and simply at www.jawfinder.biz

Schunk

Soft top jaws, serration 90° 52
Soft top jaws, without mounting holes, serration 90° 53
Soft top jaws, serration 60° 54
Soft top jaws, tongue and groove, 120° bevelled 56
Soft top jaws, tongue and groove, for key bar chucks 57
Reversible top jaws, hardened, serration 60° 58
Reversible top jaws, hardened, tongue and groove 59
Base jaws GB, hardened, diagonally toothing 60
Soft one-piece jaws BL, diagonally toothing 61
One-piece reversible jaws EB, hardened, diagonally toothing 62
Draw-down jaws NB, diagonally toothing 63
Base jaws GBG, hardened, straight toothing 65
Soft one-piece jaws BLG, straight toothing 66
One-piece reversible jaws EBG, hardened, straight toothing 67
Draw-down jaws NBG, straight toothing 68
Claw-type jaws, hardened, serration 90° 70
Claw-type jaws, hardened, serration 60° 71
Claw-type jaws, hardened, tongue and groove 72
Soft segment top jaws, serration 60° 73

Errors and corrections are reserved!

Soft top jaws, serration 90°

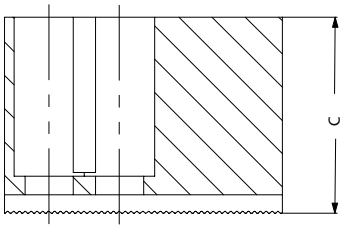

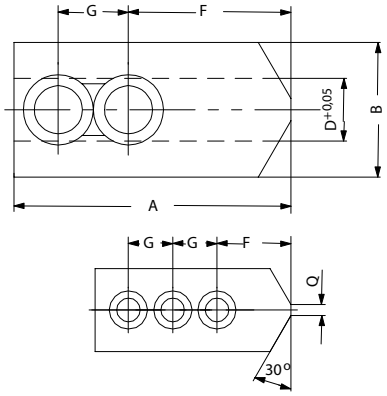

Tool group C 21
Type 543/538 **Soft top jaws, set, can be hardened**, **serration 90°** - material: 16 MnCr 5

Chuck Type	2-jaw set	3-jaw set	4-jaw set	Jaw length A	Jaw width B	Jaw height C	D	F	G	Q	Serration	Weight approx. kg
ROTA NCD 132-32	**045794** ●	**046402** ●	**046450** ●	53	22,5	30	10	20	12	3	1/16"x 90°	0,223
ROTA NCD 165-46	**045795** ●	**046403** ●	**046451** ●	55	26,5	38	12	31	15	-	1/16"x 90°	0,32
ROTA NC 165; ROTA NCD 185-54; ROTA NCF 165	**133147** ●	**133152** ●	**133157** ●	66,7	36,5	53	17	36	19	-	1/16"x 90°	0,7
ROTA NCF plus 185-52; ROTA NCK plus 165-45; ROTA NC plus 185-52; ROTA NCR 250; ROTA NCR 315; ROTA TP 160-38	-	**585017**	-	70	32,5	40	14			5	1/16"x90°	1,7
ROTA NC 210; ROTA NCD 185-54; ROTA NCD 215-66; ROTA NCF 210; ROTA NCF plus 215-66; ROTA NCK plus 210-52; ROTA NCK plus 250-75; ROTA NCO 210; ROTA NC plus 215-66; ROTA TP 200-52	**133148** ●	**133153** ●	**133158** ●	75	36,5	53	17	44	19	-	1/16"x 90°	0,88
ROTA NC 400-120; ROTA NC 500-160; ROTA NCD 400-165; ROTA NCD 500-165; ROTA NCF 500-160; ROTA NCO 400; ROTA NCO 500	-	**118000**	-	75	36,5	53	17	41	22	-	1/16"x90°	2,7
ROTA NC 210; ROTA NCD 185-54; ROTA NCD 215-66; ROTA NCF 210; ROTA NCF plus 215-66; ROTA NCK plus 210-52; ROTA NCK plus 250-75; ROTA NCO 210; ROTA NC plus 215-66; ROTA TP 200-52	-	**461712** ●	-	75	36,5	65	17	44	19	-	1/16"x90°	3,4
	-	**585021** ■	-	90	36,5	40	17	47	23	5	1/16"x90°	2,7
	-	**894365** ●	-	90	40	60	17	43	22	5	1/16"x90°	4,2
	-	**894357** ■	-	98	35	40	17	61	22	-	1/16"x90°	2,9
ROTA NC 250; ROTA NC 315; ROTA NCD 255-86; ROTA NCD 315-115; ROTA NCF 250; ROTA NCF 315; ROTA NCF plus 260-86; ROTA NCF plus 315-104; ROTA NCK plus 315-91; ROTA NCO 260; ROTA NCO 315; ROTA NC plus 260-86; ROTA NC plus 315-104; ROTA TP 250-68; ROTA TP 315-105; ROTA TP 315-90	**133149** ●	**133154** ●	**133159** ●	95	45	54,5	21	55	25	-	1/16"x 90°	1,4
	-	**585531** ●	-	110	50	55,5	21	60	30	-	1/16"x90°	6,3
	133150 ●	**133155** ●	**133160** ●	103	50	80	21	62	25	-	1/16"x 90°	2,58
	-	**894366** ●	-	120	50	80	21	62	28	-	1/16"x90°	8,9
ROTA NC 400-120; ROTA NC 500-160; ROTA NCD 400-165; ROTA NCD 500-165; ROTA NCF 400-120; ROTA NCF 500-160; ROTA NCO 400; ROTA NCO 500	**133151** ●	**133156** ●	**133161** ●	130	50	80	25,5	79	31	-	3/32"x 90°	3,1
	-	**118004** ■	-	130	50	80	25,5	20	35	-	3/32"x90°	3,1

● from stock ■ within 4 weeks

Soft top jaws, without mounting holes, serration 90°

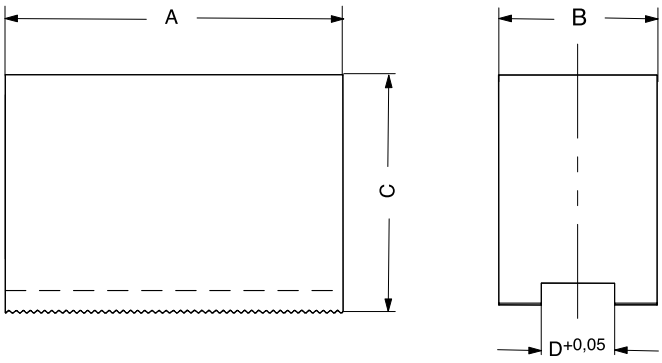

Tool group C 21
Type 543-28 **Soft top jaws, piece, without mounting holes, can be hardened, serration 90°** - material: 16 MnCr 5

Chuck Type	Item no.	Jaw length A	Jaw width B	Jaw height C	D	Serration	Weight approx. kg
ROTA NCD 132-32	**883005** ●	52	26,5	38	10	1/16"x90°	0,4
ROTA NCD 165-46	**631327** ●	55	26,5	38	12	1/16"x90°	0,4
ROTA 2B 160; ROTA NC 165; ROTA NCD 185-54; ROTA NCF 165	**667392** ■	90	36,5	53	17	1/16"x90°	1,3
ROTA 2B 160; ROTA NC 165; ROTA NC 210; ROTA NCD 185-54; ROTA NCD 215-66; ROTA NCF 165; ROTA NCF 210; ROTA NCF plus 215-66; ROTA NCK plus 210-52; ROTA NCO 210; ROTA NC plus 215-66; ROTA TP 200-52	**155423** ■	105	36,5	53	17	1/16"x90°	1,5
	681620 ■	120	36,5	53	17	1/16"x90°	1,7
ROTA 2B 160; ROTA NC 165; ROTA NCD 185-54; ROTA NCF 165	**155424**	90	45	54,5	17	1/16"x90°	1,7
ROTA 2B 160; ROTA NC 165; ROTA NC 210; ROTA NCD 185-54; ROTA NCD 215-66; ROTA NCF 165; ROTA NCF 210; ROTA NCF plus 215-66; ROTA NCK plus 210-52; ROTA NCO 210; ROTA NC plus 215-66; ROTA TP 200-52	**155425** ●	105	45	54,5	17	1/16"x90°	2
ROTA NC 210; ROTA NCD 215-66; ROTA NCF 210; ROTA NCF plus 215-66; ROTA NCK plus 210-52; ROTA NCO 210; ROTA NC plus 215-66; ROTA TP 200-52	**155426** ■	120	45	54,5	17	1/16"x90°	2,2
	155427 ●	90	50	80	17	1/16"x90°	2,6
ROTA 2B 200; ROTA NC 250; ROTA NC 315; ROTA NCD 255-86; ROTA NCD 315-115; ROTA NCF 250; ROTA NCF 315; ROTA NCF plus 260-86; ROTA NCF plus 315-104; ROTA NCK plus 315-91; ROTA NCO 260; ROTA NCO 315; ROTA NC plus 260-86; ROTA NC plus 315-104; ROTA TP 250-68; ROTA TP 315-90	**155428** ●	120	45	54,5	21	1/16"x90°	2,2
	155429 ■	150	45	54,5	21	1/16"x90°	2,7
	667208 ■	120	50	80	21	1/16"x90°	3,5
	155430 ●	150	50	80	21	1/16"x90°	4,4
ROTA NC 400-120; ROTA NC 500-160; ROTA NCD 400-165; ROTA NCD 500-165; ROTA NCF 400-120; ROTA NCF 500-160; ROTA NCO 400	**155431** ■	155	50	80	25,5	1/16"x90°	4,4
	155432 ●	155	68	89	25,5	1/16"x90°	7
	155433 ●	155	68	89	25,5	1/16"x90°	8,7

Soft top jaws, serration 60°

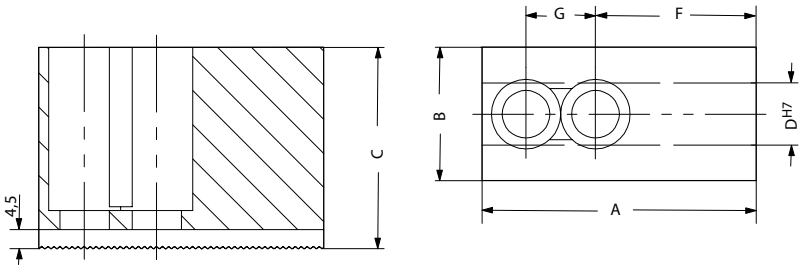

Tool group C 21
Type 543-32 **Soft top jaws, 3-jaw set, can be hardened, serration 60°** - material: 16 MnCr 5

Chuck Type	3-jaw set	Jaw length A	Jaw width B	Jaw height C	D	F	G	Serration	Weight approx. kg
ROTA NC 165; ROTA NCD 165-46; ROTA NCD 185-54; ROTA NCF 165; ROTA NCF plus 185-52; ROTA NCK 165; ROTA NCK plus 165-45	**154865** ●	72	30,5	43	12	37	20	1,5 x 60°	0,5
ROTA NC 210; ROTA NCD 215-66; ROTA NCF 210; ROTA NCK 210; ROTA NCK plus 210-52; ROTA NC plus 215-66	**154867** ●	95	35	45,5	14	46	25	1,5 x 60°	0,9
ROTA NC 250; ROTA NCD 255-86; ROTA NCF 250; ROTA NCF plus 260-86; ROTA NCK 250; ROTA NCK plus 250-75; ROTA NC plus 260-86	**154869** ●	110	50	45	16	50	30	1,5 x 60°	1,7
ROTA NCD 315-115; ROTA NCF plus 315-104; ROTA NCK 315; ROTA NCK plus 315-91; ROTA NC plus 315-104	**154871** ●	130	50	55,5	21	52	30	1,5 x 60°	1,9

Soft top jaws, serration 60°

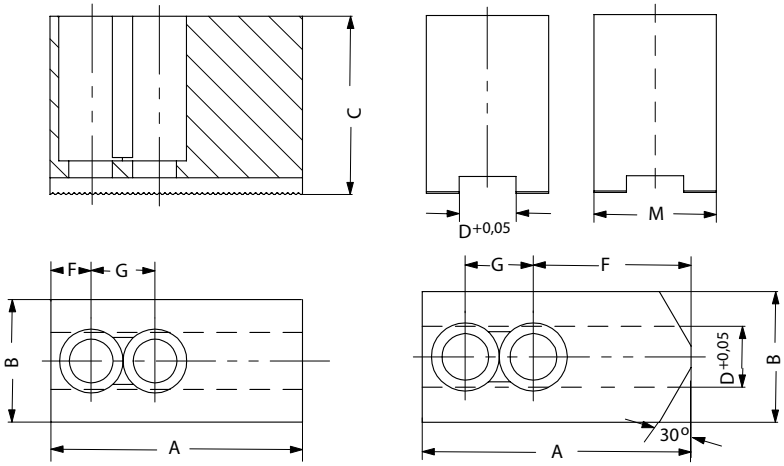

Tool group C 21
Type 530 **Soft top jaws, set, can be hardened, serration 60°** - material: 16 MnCr 5

Chuck Type	2-jaw set	3-jaw set	Jaw length A	Jaw width B	Jaw height C	D	F	G	Serration	Weight approx. kg
ROTA NCD 315-115; ROTA NCF plus 315-104; ROTA NCK 315; ROTA NCK plus 315-91; ROTA NC plus 315-104	**046442** ●	**046421** ●	120	50	80	21	67	28	1,5 x 60°	3,125

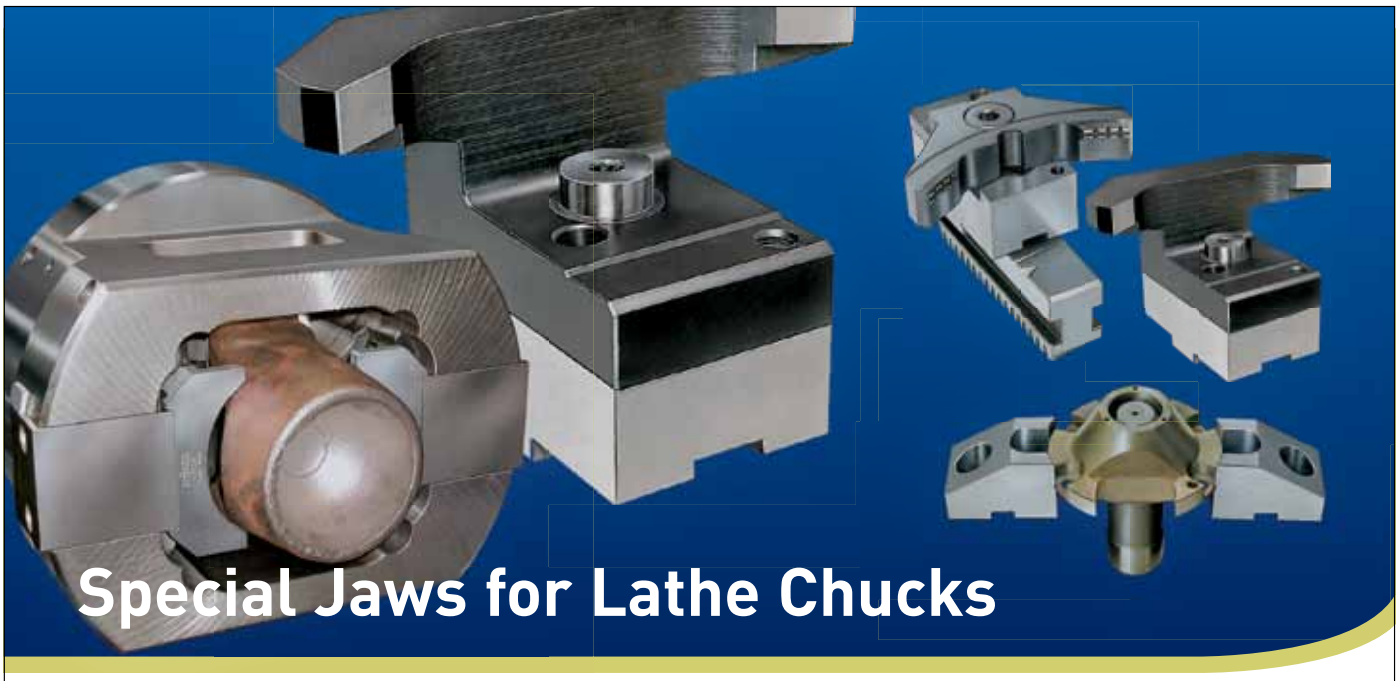

High flexibility and
individual clamping options

With our own construction department and production we are the perfect partner concerning gripping solutions and clamping problems.
For designing the various styles and forms we rely on our experience of more than 100 years.

Drill Chucks
Live Centers
→ Lathe Chucks
Vices
Automation Technology
Power Chuck Technology
Mandrels
Tool Clamping Systems
Special Design

www.roehm.biz

driven by technology

Soft top jaws, tongue and groove, 120° bevelled

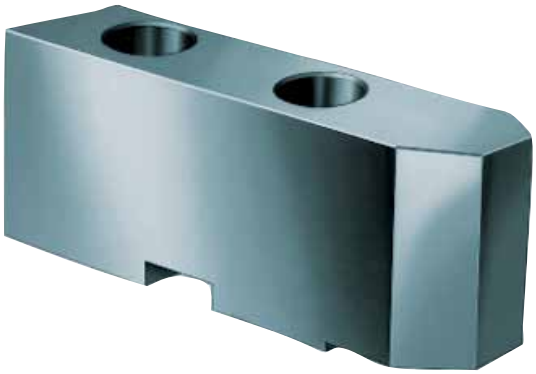

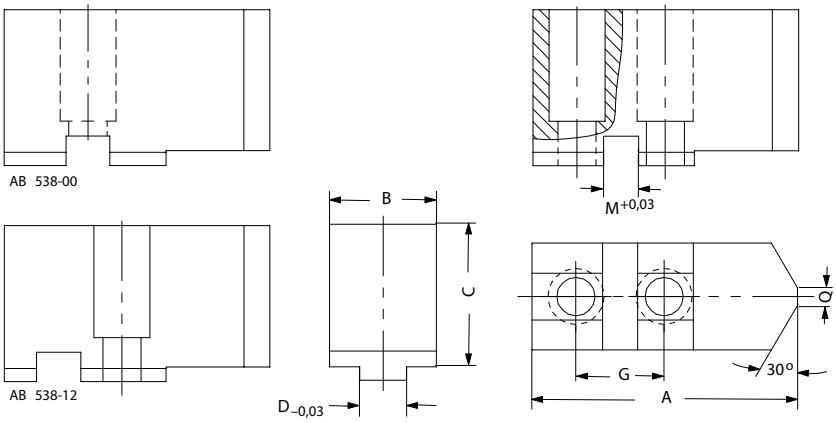

Tool group C 21
Type 549/538 **Soft top jaws, set, can be hardened, tongue and groove 120° bevelled,** material: 16 MnCr 5

Chuck Type	2-jaw set	3-jaw set	Jaw length A	Jaw width B	Jaw height C	D	F	G	M	Q	Weight approx. kg
ROTA NCO 165	**123359** ●	**123358** ●	72,7	36,5	53	10	32,2	25	16	3	0,72
ROTA 2B 250; ROTA NCO 260	**123434** ●	**123433** ●	115,3	45	54,5	20	58,3	40	16	6	1,55
ROTA 2B 315; ROTA NCO 315	**129847** ●	**129849** ●	146	50	80	20	63,5	50	16	6	3,6

Soft top jaws, tongue and groove, for key bar chucks

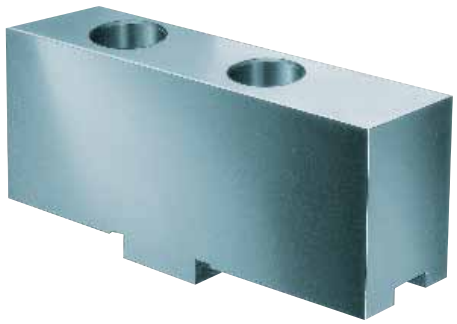

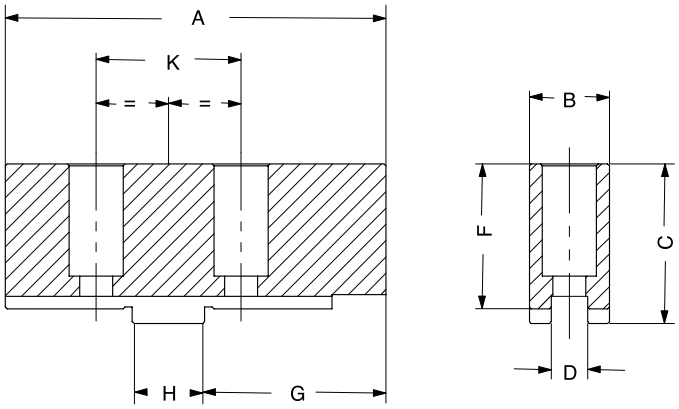

Tool group A28
Type 002 **Unstepped top jaw AB, 3-jaw set, standard design,** soft, material 16MnCr5

Chuck Type	3-jaw set	Jaw length A	Jaw width B	Jaw height C	D	F	G	H	K
ROTA-G 160; ROTA NCR 200; ROTA-S plus 160-42; ROTA-S plus 2.0 160-42; ROTA THW 165-43; ROTA THW plus 165-43; ROTA THW plus 185-52	**094008** ●	85	20,3	41	8	36,5	42	18	32
	137055[1] ●	85	24,4	47	8	42,5	42	18	32
ROTA-G 200-62; ROTA-S plus 2.0 200-52; ROTA-S plus 200-52; ROTA THW 210; ROTA THWB 210-52; ROTA THW plus 215-66; ROTA THW vario 215-62	**094009** ●	105	22	45	10	40	50	20	40
	137056[1] ●	105	34,3	56	10	51	50	20	40
ROTA-G 250-82; ROTA-G 315-102; ROTA-S plus 2.0 250-62; ROTA-S plus 250-62; ROTA THW 250; ROTA THW 265; ROTA THW 315; ROTA THWB 265-71; ROTA THW plus 260-81; ROTA THW plus 315-104	**094010** ●	125	30,4	55	12	50	70	20	40
	137057[1] ●	125	50,5	80	12	75	70	20	40
ROTA-G 400-122; ROTA-S plus 2.0 315-92; ROTA-S plus 315-92; ROTA THW 315; ROTA THW 400-120; ROTA THWB 315-86	**094011** ●	145	34,3	56	12	50	74	26	54
	137058[1] ●	145	50,5	80	12	74	74	26	54
	618098 ●	145	34,3	80	12	75	74	26	54
ROTA-G 500-162; ROTA-S plus 400-102; ROTA-S plus 500-162; ROTA THW 500-128; ROTA THW 630-160; ROTA THW 800; ROTA THWB 400-120; ROTA THWB 500-128	**094046** ●	180	50,5	80	18	73	100	30	60
ROTA-G 630-252; ROTA-S plus 630-252; ROTA-S plus 800-252	**140716** ●	260	68	110	24	102	150	40	82

1) larger design

Reversible top jaws, hardened, serration 60°

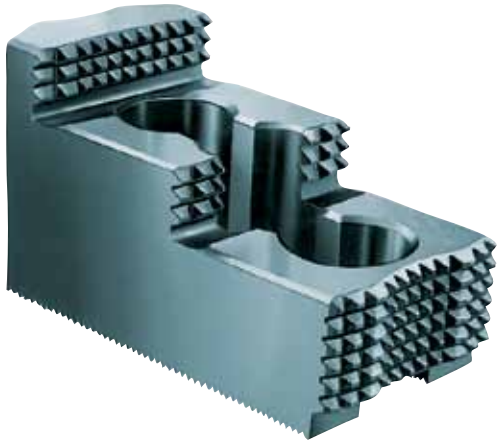

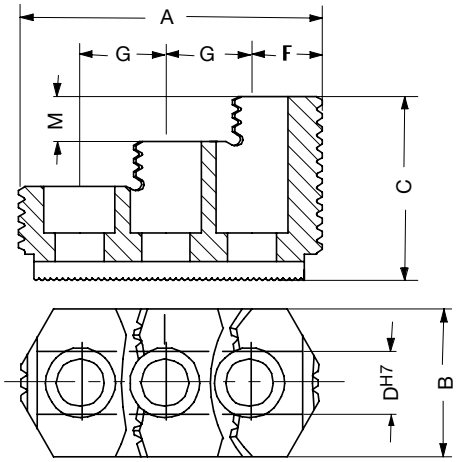

Tool group C 21
Type 543-31 **Reversible top jaws, 3-jaw set, hardened, serration 60°** - material: 16 MnCr 5

Chuck Type	3-jaw set	Jaw length A	Jaw width B	Jaw height C	D	F	G	M	Serration	Weight approx. kg
ROTA NC 165; ROTA NCD 165-46; ROTA NCD 185-54; ROTA NCF 165; ROTA NCF plus 185-52; ROTA NCK 165; ROTA NCK plus 165-45	**154674**[1] ●	66	34,7	36	12	12,5	20	12	1,5 x 60°	0,3
ROTA NC 210; ROTA NCD 215-66; ROTA NCF 210; ROTA NCF plus 215-66; ROTA NCK 210; ROTA NCK plus 210-52; ROTA NC plus 215-66	**154676** ●	81	36	49	14	17,5	25	12	1,5 x 60°	0,6
ROTA NC 250; ROTA NCD 255-86; ROTA NCF 250; ROTA NCF plus 260-86; ROTA NCK 250; ROTA NCK plus 250-75; ROTA NC plus 260-86	**154678** ●	99,5	44,5	54	16	25,5	30	13	1,5 x 60°	1,2
ROTA NCD 315-115; ROTA NCF plus 315-104; ROTA NCK 315; ROTA NCK plus 315-91; ROTA NC plus 315-104	**154816**[1] ●	103	50	55,5	21	22,5	30	17	1,5 x 60°	1,5

[1] one step only
Hardened jaws, supplied as supplement or as spares, must be ground on the chuck.

Reversible top jaws, hardened, tongue and groove

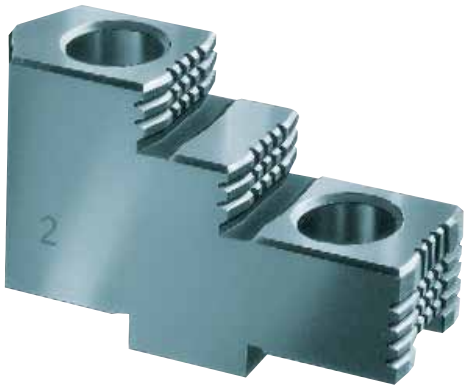

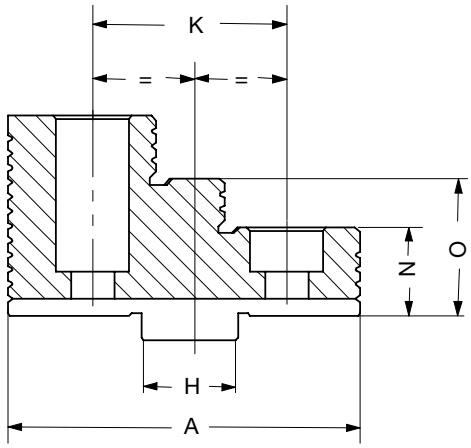

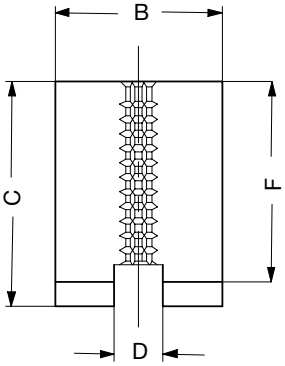

Tool group A 36
Type 530 **Reversible top jaws, 3-jaw set, hardened, tongue and groove,** for **external and internal chucking** - material: 16 MnCr 5

Chuck Type	3-jaw set	Jaw length A	Jaw width B	Jaw height C	D	F	H	K	N	O
ROTA-G 160; ROTA-S plus 160-42; ROTA-S plus 2.0 160-42; ROTA THW 165-43; ROTA THW plus 165-43; ROTA THW plus 185-52	**332774** ■	61,5	20,4	37	8	32,7	18	32	17,7	25,2
	137047 ■	62	24,4	40	8	35,7	18	32	17,7	25,7
	094012 ●	61,5	20,4	37	8	32,5	18	32	17,5	25
ROTA-G 200-62; ROTA-S plus 2.0 200-52; ROTA-S plus 200-52; ROTA THW 210; ROTA THWB 210-52; ROTA THW plus 215-66; ROTA THW vario 215-62	**332775** ■	70,5	24,4	42	10	38	20	40	18	28
	137048 ■	126	34,4	46	10	41	20	40	18	28
	094013 ●	70,5	24,4	43	10	38	20	40	18	28
ROTA-G 250-82; ROTA-G 315-102; ROTA-S plus 2.0 250-62; ROTA-S plus 250-62; ROTA THW 210; ROTA THW 250; ROTA THW 265; ROTA THW 315; ROTA THWB 265-71; ROTA THW plus 260-81; ROTA THW plus 315-104	**332776** ■	92	34,4	55	12	50	20	40	22	36
	137049 ■	92	35,7	59	12	54	20	40	22	36
ROTA-G 250-82; ROTA-G 315-102; ROTA-S plus 2.0 250-62; ROTA-S plus 250-62; ROTA THW 250; ROTA THW 315; ROTA THWB 265-71; ROTA THW plus 260-81; ROTA THW plus 315-104	**094014** ●	92	34,4	55	12	50	20	40	22	36
ROTA-G 400-122; ROTA-S plus 2.0 315-92; ROTA-S plus 315-92; ROTA THW 315; ROTA THW 400-120; ROTA THWB 315-86	**332777** ■	107	37,5	61	12	56	26	54	26	41
	137050 ■	107	50,4	67	12	61	26	54	26	41
ROTA-G 400-122; ROTA-S plus 2.0 315-92; ROTA-S plus 315-92; ROTA THW 400-120; ROTA THWB 315-86	**094015** ●	107	35,7	62	12	56	26	54	26	41
ROTA-G 500-162; ROTA-S plus 400-102; OTA-S plus 500-162; ROTA THW 500-128; ROTA THW 630-160; ROTA THW 800; ROTA THWB 400-120; ROTA THWB 500-128	**332778** ■	130	50,4	79	18	72	30	60	32	52
	094045 ●	130	50,4	79	18	72	30	60	32	52
ROTA-G 630-252; ROTA-S plus 1000-402; ROTA-S plus 630-252; ROTA-S plus 800-252	**747081** ■	185	68	110	24	102	40	82	42	72
	140715 ●	185	68	110	24	102	40	82	42	72

Stepped and hardened jaws, supplied as supplement or as spares, must be ground on the chuck.

Base jaws GB, hardened, diagonally toothing

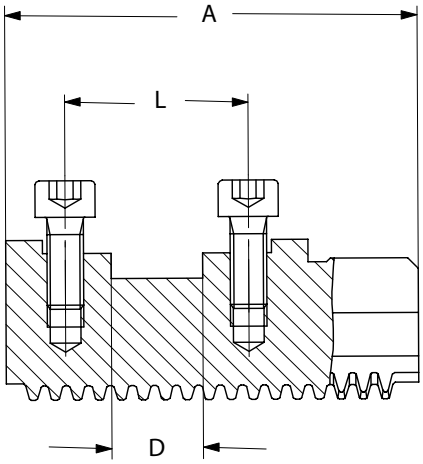

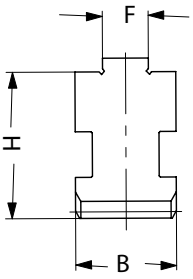

Tool group A28
Type 002 **Base jaw GB**, **3-jaw set**, with mounting bolts

Chuck Type	**3-jaw set**	Jaw length A	Jaw width B	D	F	H	L	Weight approx. kg
ROTA-S plus 160-42; ROTA-S plus 2.0 160-42	**094004** ●	74	20	18	8	29,5	32	0,265
ROTA-S plus 2.0 200-52; ROTA-S plus 200-52; ROTA THW 210	**094005** ●	90	22	20	10	35	40	0,365
ROTA-S plus 2.0 250-62; ROTA-S plus 250-62; ROTA THW 250; ROTA THW 265	**094006** ●	110	26	20	12	40	40	0,7
ROTA-S plus 2.0 315-92; ROTA-S plus 315-92; ROTA THW 315; ROTA THW 400-120	**094007** ●	125	32	26	12	46	54	1,065
ROTA-S plus 400-102; ROTA-S plus 500-162; ROTA THW 500-128	**094044** ●	160	45	30	18	52,7	60	2,35
ROTA-S plus 630-252	**140194** ●	230	65	40	24	62	82	5,665

Soft one-piece jaws BL, diagonally toothing

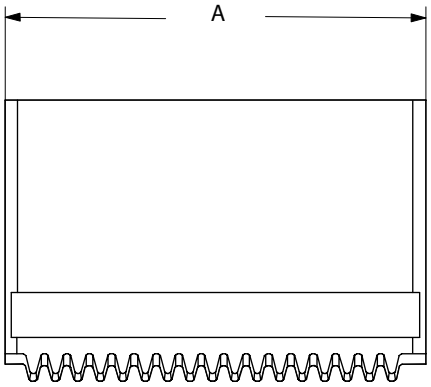

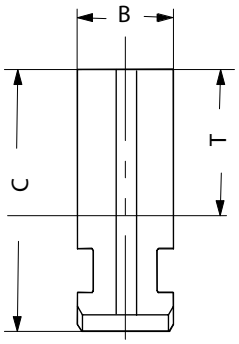

Tool group A28
Type 000 **Unstepped Jaw BL, 3-jaw set,** unstepped, soft, material 16MnCr5

Chuck Type	3-jaw set	Jaw length A	Jaw width B	Jaw height C	T	Weight approx. kg
ROTA-S plus 160-42; ROTA-S plus 2.0 160-42	**332763** ■	84,5	20	45	24	1,41
ROTA-S plus 2.0 200-52; ROTA-S plus 200-52; ROTA THW 210	**332764** ■	98,4	22	60	35	2,52
	162560 ■	98,4	22	80	55	3,5
	643088 ■	98,4	22	90	65	4
	321444 ■	98,4	22	95	70	4,2
ROTA-S plus 2.0 250-62; ROTA-S plus 250-62; ROTA THW 250; ROTA THW 265	**332765** ■	118,7	26	70	41	4,23
	810394 ■	118,7	26	80	51	5
	162561 ■	118,7	26	90	61	5,7
	810396 ■	118,7	26	100	71	6,4
	616002 ■	70	26	100	71	3,5
	616000 ■	115	26	130	101	8,5
	695681 ■	180	26	140	111	14,3
ROTA-S plus 2.0 315-92; ROTA-S plus 315-92; ROTA THW 315; ROTA THW 400-120	**332766** ■	136,6	32	79	44,5	7,3
	249680 ●	136,6	32	79	44,5	2,4
ROTA-S plus 400-102; ROTA-S plus 500-162; ROTA THW 500-128	**332767** ■	173,6	45	93	54	15,7
	249681 ●	173,6	45	93	54	5

One-piece reversible jaws EB, hardened, diagonally toothing

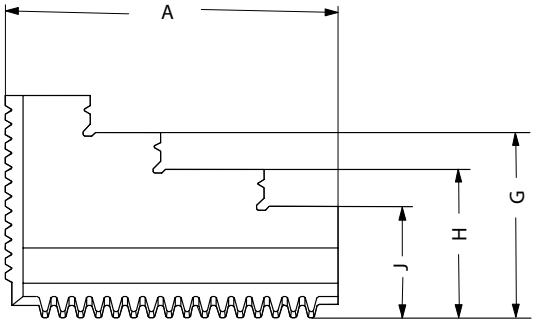

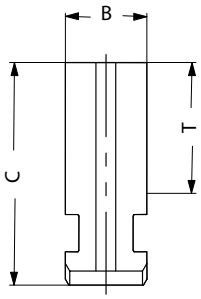

Tool group A28
Type 000 **One-piece jaw EB, 3-jaw set,** hardened

Chuck Type	3-jaw set	Jaw length A	Jaw width B	Jaw height C	G	H	J	T	Weight approx. kg
ROTA-S plus 160-42; ROTA-S plus 2.0 160-42	**332757** ■	77,7	20	45	37,5	30	22,5	24	1,1
	094000 ●	77,7	20	45	37,5	30	22,5	24	0,5
ROTA-S plus 2.0 200-52; ROTA-S plus 200-52; ROTA THW 210	**332758** ■	94,7	22	60	50	40	30	35	1,9
	094001 ●	94,7	22	60	50	40	30	35	0,635
ROTA-S plus 2.0 250-62; ROTA-S plus 250-62; ROTA THW 250; ROTA THW 265	**332759** ■	114	26	70	56	-	42	41	3,3
	094002 ●	114	26	70	56	-	42	41	1,135
ROTA-S plus 2.0 315-92; ROTA-S plus 315-92; ROTA THW 315; ROTA THW 400-120	**332760** ■	130	32	79	64	-	49	44,5	5,3
	094003 ●	130	32	79	64	-	49	44,5	1,835
ROTA-S plus 400-102; ROTA-S plus 500-162; ROTA THW 500-128	**332761** ■	167	45	93	73	-	53	54	10,8
	094043 ●	167	45	93	73	-	53	54	3,665

Stepped and hardened jaws, supplied as supplement or as spares, must be ground on the chuck.
In case of a subsequent jaw delivery please send us the chuck.

Draw-down jaws NB, diagonally toothing

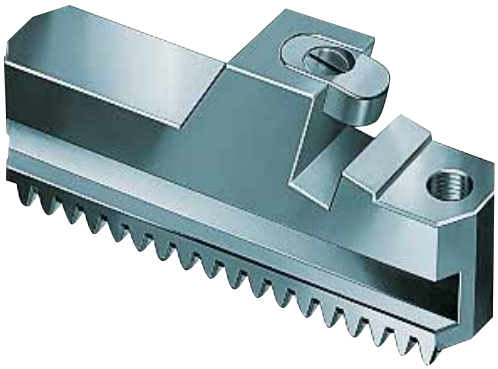

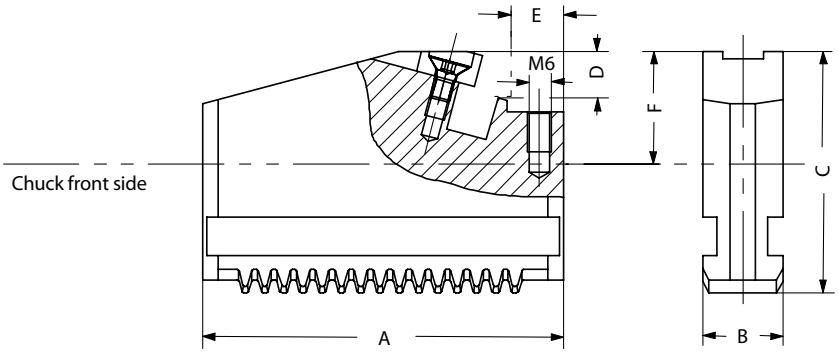

Tool group C 21
Type 545-00 **Draw-down jaws, 1 piece,** without interchangeable clamping inserts, **diagonally toothing**

Chuck Type	Item no.	Jaw length A	Jaw width B	Jaw height C	D	E	F	Thread
ROTA-S plus 160-42; ROTA-S plus 2.0 160-42	**141037** ●	84,4	20	43,5	15	11	22,5	M6
	141038 ●	84,4	20	43,5	15	32	22,5	M6
ROTA-S plus 2.0 200-52; ROTA-S plus 200-52; ROTA THW 210	**141039** ●	98,4	22	47,5	15	12	22,5	M6
	141040 ●	98,4	22	47,5	15	48	22,5	M6
ROTA-S plus 2.0 250-62; ROTA-S plus 250-62; ROTA THW 250	**141041** ●	118,7	26	58,5	20	12	29,5	M6
	141042 ●	118,7	26	58,5	20	58	29,5	M6
ROTA-S plus 2.0 315-92; ROTA-S plus 315-92; ROTA THW 315; ROTA THW 400-120	**141043** ●	136,4	32	63,9	20	12	29,5	M6
	141044 ●	136,4	32	63,9	20	72	29,5	M6
ROTA-S plus 400-102; ROTA THW 500-128	**141045** ●	173,6	45	73,4	25	12	34,3	M6
ROTA-S plus 400-102	**141046** ●	173,6	45	73,4	25	77	34,3	M6
ROTA THW 500-128	**141048** ●	173,6	45	73,4	25	110	34,3	M6

Interchangeable clamping inserts

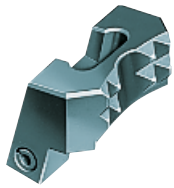

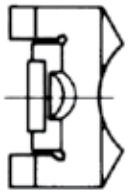

Tool group C 15
Type 545-60 **Interchangeable clamping inserts**, 1 piece, **with claws**

Item no.	Size	Design	Contents of delivery
151029 ●	**140**	with claws	piece
141049 ●	**160/200**	with claws	piece
141052 ●	**250/315**	with claws	piece
141055 ●	**400/500**	with claws	piece

Interchangeable clamping inserts

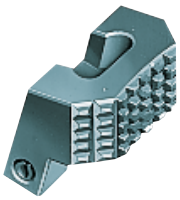

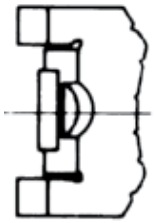

Tool group C 15
Type 545-70 **Interchangeable clamping inserts**, 1 piece, **with serrated toothing**

Item no.	Size	Design	Contents of delivery
151039 ●	**140**	with serrated toothing	piece
141050 ●	**160/200**	with serrated toothing	piece
141053 ●	**250/315**	with serrated toothing	piece
141056 ●	**400/500**	with serrated toothing	piece

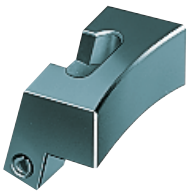

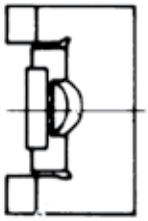

Tool group C 15
Type 545-80 **Interchangeable clamping inserts**, 1 piece, **with heat treatable surface**

Item no.	Size	Design	Contents of delivery
151040 ●	**140**	with heat treatable surface	piece
141051 ●	**160/200**	with heat treatable surface	piece
141054 ●	**250/315**	with heat treatable surface	piece
141057 ●	**400/500**	with heat treatable surface	piece

Tool group C 15
Type 544-00 **Interchangeable workpiece rests**, 1 piece, **in different lengths**

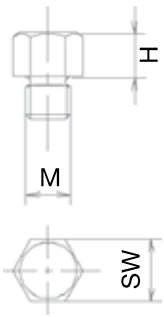

Item no.	Size	M	H	SW
289188 ●	**2**	M6	5	9
138950 ●	**2**	M6	10	9
725581 ●	**2**	M6	15	9

● from stock ■ within 4 weeks

Base jaws GBG, hardened, straight toothing

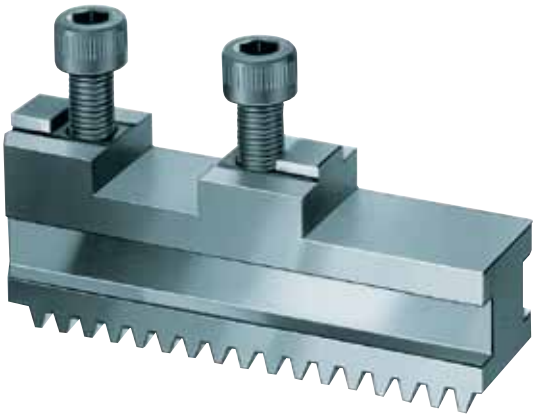

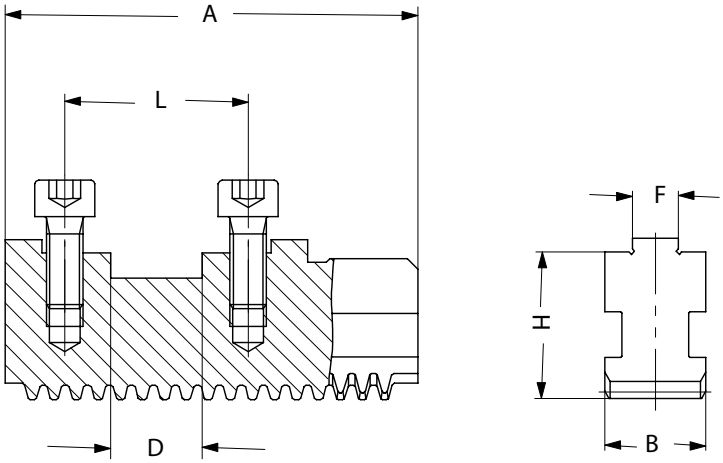

Tool group C 21
Type 574-11 **Base jaws, 3-jaw-set, hardened, straight toothing,** with cylindrical screws DIN 912-12.9

Chuck Type	**3-jaw set**	Jaw length A	Jaw width B	D	F	H	L	Weight approx. kg
ROTA-G 160; ROTA THW 165-43; ROTA THW plus 165-43; ROTA THW plus 185-52	**463548** ●	65	20	18	8	27,5	32	0,7
ROTA-G 200-62; ROTA THW 210; ROTA THW plus 215-66; ROTA THW vario 215-62	**463549** ●	85	22	20	10	29,5	40	1
ROTA-G 250-82; ROTA THW 250; ROTA THW plus 260-81	**463550** ●	104	26	20	12	37	40	1,8
ROTA-G 315-102; ROTA THW 315; ROTA THW plus 315-104	**463551** ●	115	32	20	12	43	40	2,7
ROTA-G 400-122; ROTA THW 400-120	**463552** ●	125	32	26	12	43	54	3

Soft one-piece jaws BLG, straight toothing

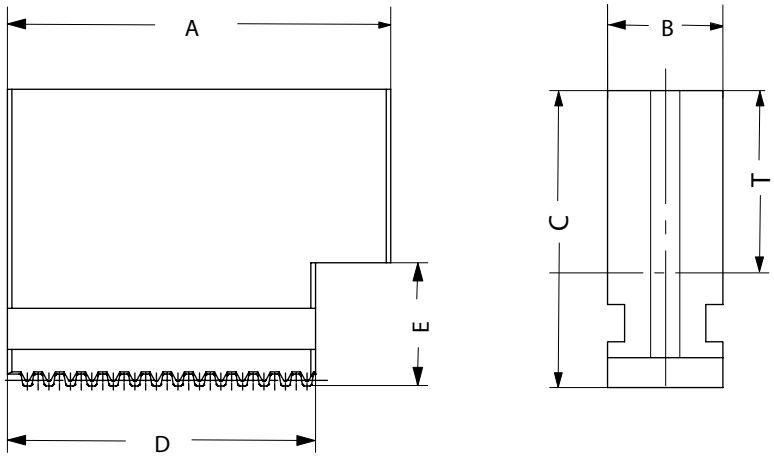

Tool group C 21
Type 574-37 **Soft one-piece jaws**, **3-jaw set**, **can be hardened**, **straight toothing, guidance hardened and ground** - material: 16 MnCr 5

Chuck Type	**3-jaw set**	Jaw length A	Jaw width B	Jaw height C	D	E	T	Weight approx. kg
ROTA THW 165-43	**463562** ●	65	20	55	56	25	33	1,3
ROTA-G 200-62; ROTA THW 210	**463563** ●	84	22	65	67,5	27	38	2,2
ROTA-G 250-82; ROTA THW 250	**463564** ●	99	26	84	77	36	53	4,3
ROTA-G 315-102; ROTA THW 315	**463565** ●	121	32	90	93	41	54	6,7
ROTA THW 400-120	**463566** ●	148	32	100	120	41	64	9,2

One-piece reversible jaws EBG, hardened, straight toothing

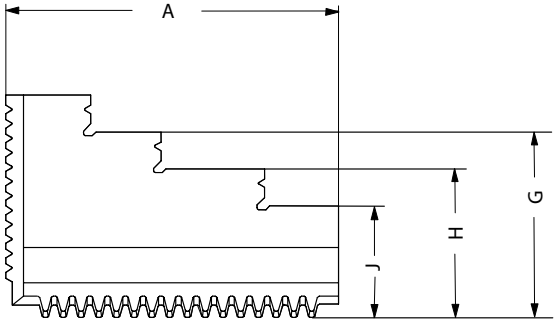

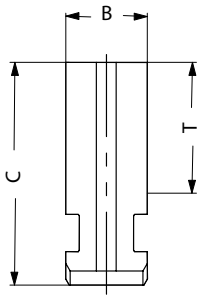

Tool group C 21
Type 574-27 **One-piece reversible jaws, 3-jaw set, hardened, straight toothing** - material: 16 MnCr 5

Chuck Type	**3-jaw set**	Jaw length A	Jaw width B	Jaw height C	G	H	J	T	Weight approx. kg
ROTA THW 165-43	**463555** ●	58	20	44	37	30	23	23	0,6
ROTA-G 200-62; ROTA THW 210	**463556** ●	75	22	51	43	35	27	26	1,3
ROTA-G 250-82; ROTA THW 250	**463557** ●	90	26	60	50	40	30	31	2
ROTA-G 315-102; ROTA THW 315	**463558** ●	117	32	66	56	46	36	32	3,4
ROTA THW 400-120	**463559** ●	137	32	70	59	48	37	36	4,9

Hardened jaws, supplied as supplement or as spares, must be ground on the chuck.

Draw-down jaws NBG, straight toothing

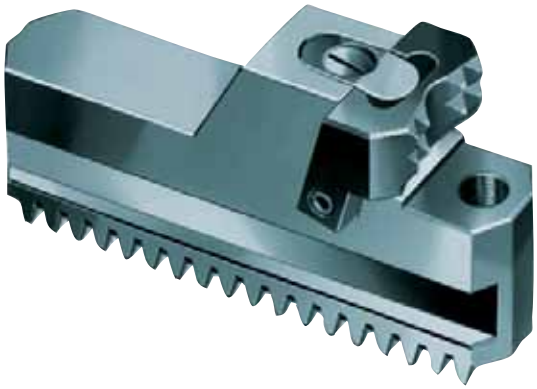

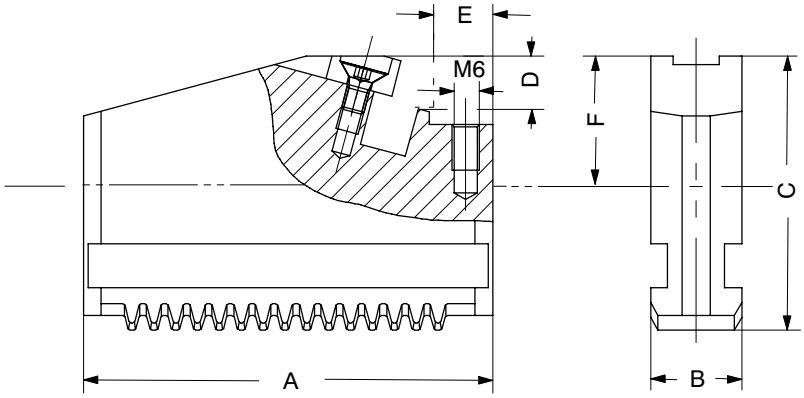

Tool group C 21
Type 545-30 **Draw-down jaws, for interchangeable clamping inserts**, **straight toothing**, 1 piece, without clamping inserts

Chuck Type	Item no.	Jaw length A	Jaw width B	Jaw height C	D	E	F	Thread
ROTA THW 165-43	**485522** ●	65	20	43	15	11	22,5	M6
	485523 ●	72	20	43	15	30	22,5	M6
ROTA-G 200-62; ROTA THW 210	**485524** ●	85	22	47	15	12	22,5	M6
	485525 ●	95	22	47	15	45	22,5	M6
ROTA-G 250-82; ROTA THW 250	**485526** ●	104	26	58	20	12	29,5	M6
	485527 ●	104	26	58	20	50,5	29,5	M6
ROTA-G 315-102; ROTA THW 315	**485528** ●	115	32	63	20	12	29,5	M6
	485529 ●	123	32	63	20	61,5	29,5	M6
ROTA THW 400-120	**485530** ●	125	32	63	20	12	29,5	M6
	485531 ●	134	32	63	20	67	29,5	M6
ROTA THW 500-128	**485532** ■	160	45	81	20	12	34	M6
	485533 ■	160	45	81	25	96	34	M6

Interchangeable clamping inserts

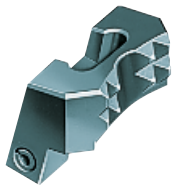

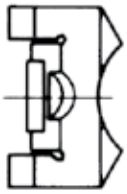

Tool group C 15
Type 545-60 **Interchangeable clamping inserts**, 1 piece, **with claws**

Item no.	Size	Design	Contents of delivery
151029 ●	**140**	with claws	piece
141049 ●	**160/200**	with claws	piece
141052 ●	**250/315**	with claws	piece
141055 ●	**400/500**	with claws	piece

● from stock ■ within 4 weeks

Interchangeable clamping inserts

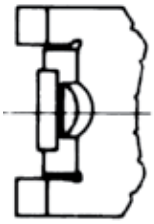

Tool group C 15
Type 545-70 **Interchangeable clamping inserts**, 1 piece, **with serrated toothing**

Item no.	Size	Design	Contents of delivery
151039 ●	**140**	with serrated toothing	piece
141050 ●	**160/200**	with serrated toothing	piece
141053 ●	**250/315**	with serrated toothing	piece
141056 ●	**400/500**	with serrated toothing	piece

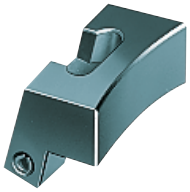

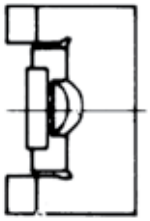

Tool group C 15
Type 545-80 **Interchangeable clamping inserts**, 1 piece, **with heat treatable surface**

Item no.	Size	Design	Contents of delivery
151040 ●	**140**	with heat treatable surface	piece
141051 ●	**160/200**	with heat treatable surface	piece
141054 ●	**250/315**	with heat treatable surface	piece
141057 ●	**400/500**	with heat treatable surface	piece

Tool group C 15
Type 544-00 **Interchangeable workpiece rests**, 1 piece, **in different lengths**

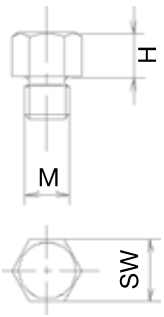

Item no.	Size	M	H	SW
289188 ●	**2**	M6	5	9
138950 ●	**2**	M6	10	9
725581 ●	**2**	M6	15	9

Claw-type jaws, hardened, serration 90°

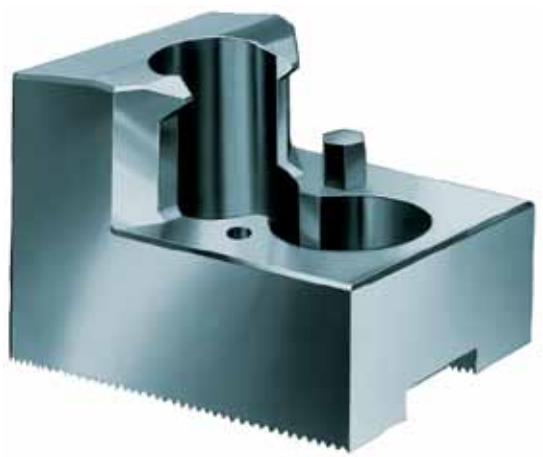

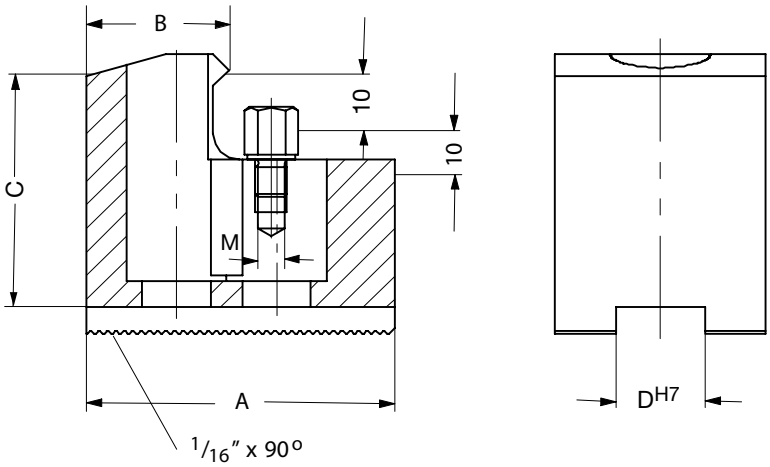

Tool group C 21
Type 544-50 **Claw-type jaws**, 1 piece, **hardened**, **serration 90°** - width of the groove **12 - 25,5**

Chuck Type	Item no.	Jaw length A	B	Jaw height C	D	Thread
ROTA NCD 165-46	144320 ●	66	52	38	12	M6
	144321 ●	56	34	38	12	M6
	144322 ●	66	25	38	12	M6
ROTA NC 165; ROTA NC 210; ROTA NCD 165-46; ROTA NCD 215-66; ROTA NCF 165; ROTA NCF 210; ROTA TP 200-52	137031 ●	67	53	45	17	M6
	137032 ●	65	46	45	17	M6
	137033 ●	55	39	45	17	M6
	137034 ●	50	31	45	17	M6
	137035 ●	55	27	45	17	M6
	137036 ●	65	19	45	17	M6
	137037 ●	65	26	45	17	M6
	137038 ●	55	24	45	17	M6
	137039 ●	55	40	45	17	M6
ROTA NC 250; ROTA NC 315; ROTA NCD 255-86; ROTA NCD 315-115; ROTA NCF 250; ROTA NCF 315; ROTA TP 250-68; ROTA TP 315-90	137041 ●	95	80	50	21	M6
	137042 ●	75	60	50	21	M6
	137043 ●	60	43	50	21	M6
	137044 ●	70	37	50	21	M6
	137045 ●	95	25	50	21	M6
	137046 ●	80	30	50	21	M6
ROTA NC 400-120; ROTA NC 500-160; ROTA NCD 400-165; ROTA NCD 500-165; ROTA NCF 400-120; ROTA NCF 500-160	137051 ●	130	113	65	25,5	M6
	137052 ●	90	67	65	25,5	M6
	137053 ●	100	45	65	25,5	M6
	137054 ●	130	33	65	25,5	M6

Tool group C 15
Type 544-00 **Interchangeable workpiece rests**, 1 piece, **in different lengths**

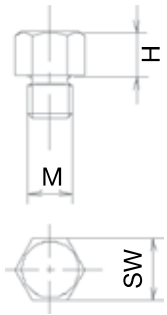

Item no.	Size	M	H	SW
147263 ●	1	M5	5	7
139177 ●	1	M5	8	7
298191 ●	1	M5	10	7
289188 ●	2	M6	5	9
138950 ●	2	M6	10	9
725581 ●	2	M6	15	9

● from stock ■ within 4 weeks

Claw-type jaws, hardened, serration 60°

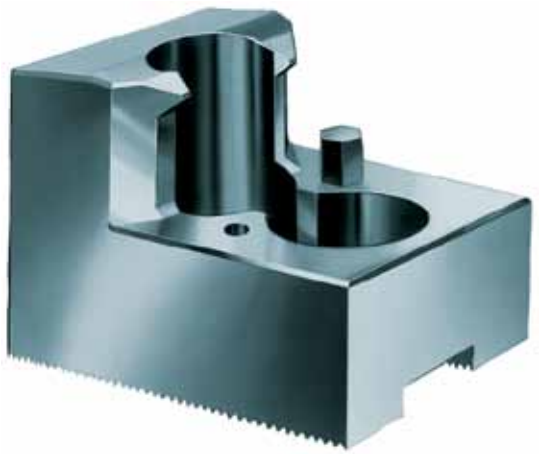

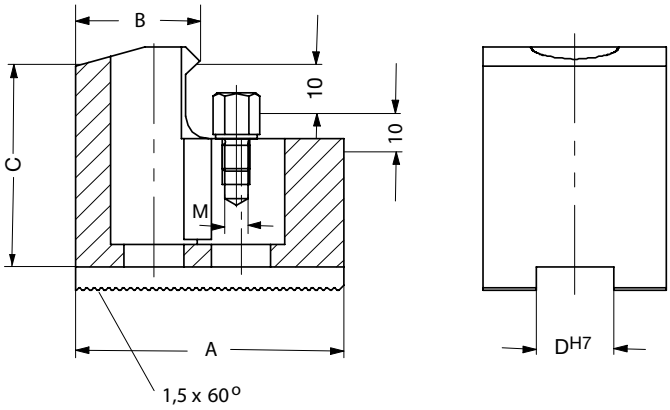

Tool group C 21
Type 543-33 **Claw-type jaws**, 1 piece, **hardened**, **serration 60°** - width of the groove **12**

Chuck Type	Item no.	Jaw length A	B	Jaw height C	D	Thread
ROTA NCK 165; ROTA NCK plus 165-45	**156025** ■	**67**	53	45	12	M6
	156027 ■	**65**	46	45	12	M6
	156029 ■	**55**	40	45	12	M6
	161189 ■	**55**	24	45	12	M6
ROTA NCK 250; ROTA NCK plus 250-75	**156099** ●	**95**	80	50	16	M6
	156101 ●	**75**	60	50	16	M6
	156103 ●	**60**	43	50	16	M6
	156105 ●	**70**	37	50	16	M6

Tool group C 15
Type 544-00 **Interchangeable workpiece rests**, 1 piece, **in different lengths**

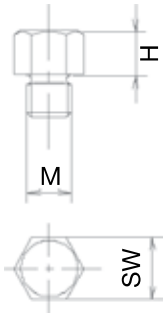

Item no.	Size	M	H	SW
289188 ●	**2**	M6	5	9
138950 ●	**2**	M6	10	9
725581 ●	**2**	M6	15	9

Claw-type jaws, hardened, tongue and groove

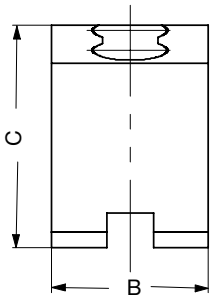

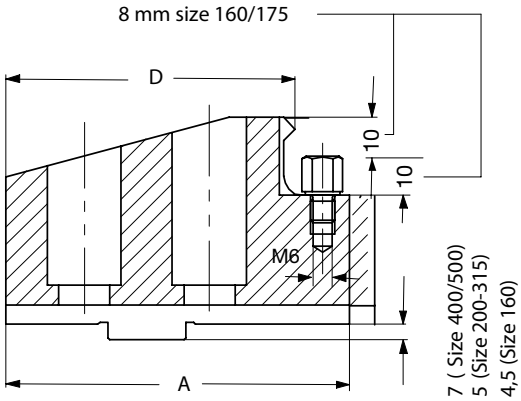

Tool group C 21
Type 544-00 **Reversible claw-type top jaws, 1 piece**, tongue and groove, hardened

Chuck Type	Item no.	Jaw length A	Jaw width B	Jaw height C	D
ROTA-G 160; ROTA-S plus 160-42; ROTA-S plus 2.0 160-42; ROTA THW 165-43; ROTA THW plus 165-43; ROTA THW plus 185-52	**137060** ●	**66**	24	37,5	17
	137061 ●	**66**	20	37,5	61
	137062 ●	**56**	20	37,5	29
ROTA-G 200-62; ROTA-S plus 2.0 200-52; ROTA-S plus 200-52; ROTA THW 210; ROTA THW plus 215-66	**137064** ●	**81**	24	43	71
	137065 ●	**66**	24	43	38,5
	137066 ●	**79**	34	43	29,5
	137067 ●	**81**	34	43	71
	137068 ●	**66**	34	43	38,5
ROTA-G 250-82; ROTA-G 315-102; ROTA-S plus 2.0 250-62; ROTA-S plus 250-62; ROTA THW 250; ROTA THW 315; ROTA THW plus 260-81; ROTA THW plus 315-104	**137108** ●	**90**	34	55	78
	137109 ●	**72**	34	55	38
	137110 ●	**80**	50	55	29
	137111 ●	**90**	50	55	78
	137112 ●	**72**	50	55	38
ROTA-G 400-122; ROTA-S plus 2.0 315-92; ROTA-S plus 315-92; ROTA THW 315; ROTA THW 400-120	**137114** ●	**100**	34	62	90
	137115 ●	**86**	34	62	42
	137116 ●	**93**	50	62	30
	137117 ●	**106**	50	62	90
	137118 ●	**86**	50	62	42
ROTA-G 500-162; ROTA-S plus 400-102; ROTA-S plus 500-162; ROTA THW 500-128	**137119** ●	**124**	50	62	39
	137120 ●	**124**	50	62	112
	137121 ●	**100**	50	62	48

Tool group C 15
Type 544-00 **Interchangeable workpiece rests**, 1 piece, **in different lengths**

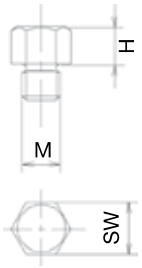

Item no.	Size	M	H	SW
289188 ●	**2**	M6	5	9
138950 ●	**2**	M6	10	9
725581 ●	**2**	M6	15	9

● from stock ■ within 4 weeks

Soft segment top jaws, serration 60°

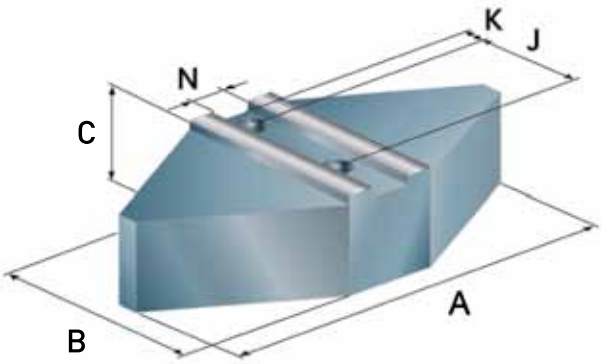

Design I

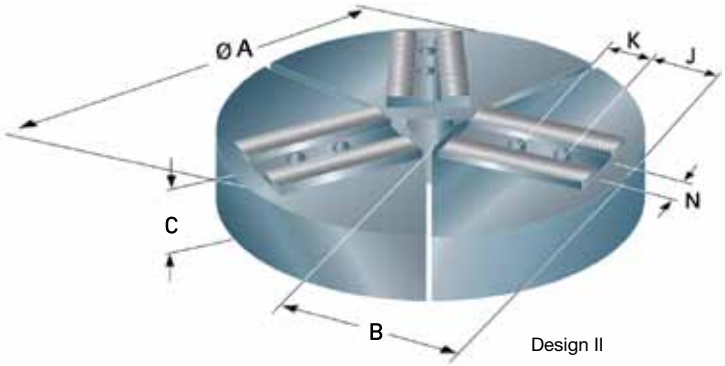

Design II

Tool group C 21
Type 9052 **Segment top jaws, 3 jaw set, can be hardened, serration 1,5x60° / 3x60°** - material: C15

Chuck Type	3-jaw set	A	B	C	N	K	J	Material	Design	Weight approx. kg
ROTA NC 165; ROTA NCF 165; ROTA NCK 165	**1032921** ■	120	60	60	12	15	20	steel	Design I	9
	1032922 ■	120	64	64	12	15	20	aluminium	Design I	3,2
	1032923 ■	169	76	76	12	20	20	steel	Design II	13
	1032924 ■	169	76	76	12	20	20	aluminium	Design II	4
ROTA NC 210; ROTA NCF 210; ROTA NCK 210	**1032925** ■	150	64	76	14	15	25	steel	Design I	14
	1032926 ■	150	64	76	14	15	25	aluminium	Design I	5
	1032927 ■	210	76	95	14	25,5	25	steel	Design II	20
	1032928 ■	210	76	95	14	25,5	25	aluminium	Design II	7
ROTA NC 250; ROTA NCF 250; ROTA NCK 250	**1032929** ■	170	64	89	16	20	30	steel	Design I	20
	1032930 ■	170	64	89	16	20	30	aluminium	Design I	7
	1032931 ■	254	76	111	16	27	30	steel	Design II	29
	1032932 ■	254	76	111	16	27	30	aluminium	Design II	10
ROTA NC 315; ROTA NCF 315; ROTA NCK 315	**1032933** ■	240	76	118	15	30	30	steel	Design I	28
	1032934 ■	240	76	118	18	30	30	aluminium	Design I	10
	1032935 ■	304	76	133	18	34	30	steel	Design II	41
	1032936 ■	304	76	133	18	34	30	aluminium	Design II	14
ROTA NC 400-120; ROTA NCF 400-120	**1032941** ■	280	76	152	22	30	30	steel	Design I	40
	1032942 ■	280	76	152	22	30	30	aluminium	Design II	13
	1032943 ■	381	76	171	22	34	30	steel	Design II	56
	1032944 ■	381	76	171	22	34	30	aluminium	Design II	19

SPECIAL DESIGN JAWS

You have not found the jaw you are looking for? With our own design departement and production line we are the perfect partner concerning exciting gripping solutions. Based on more than 100 years of experience in designing, various styles and forms are possible.

Find your clamping jaw quickly and simply at www.jawfinder.biz

SMW-Autoblok

Soft top jaws, serration 90° 76
Soft top jaws, without mounting holes, serration 90° 77
Soft top jaws, serration 60° 78
Soft top jaws, tongue and groove, for key bar chucks 80
Reversible top jaws, hardened, serration 90° 81
Reversible top jaws, hardened, serration 60° 82
Reversible top jaws, hardened, tongue and groove 84
Base jaws GB, hardened, diagonally toothing 85
Soft one-piece jaws BL, diagonally toothing 86
One-piece reversible jaws EB, hardened, diagonally toothing 87
Draw-down jaws NB, diagonally toothing 88
Base jaws GB, hardened, diagonally toothing 90
Soft one-piece jaws BLG, straight toothing 91
One-piece reversible jaws EBG, hardened, straight toothing 92
Draw-down jaws NBG, straight toothing 93
Claw-type jaws, hardened, serration 90° 95
Claw-type jaws, hardened, serration 60° 96
Claw-type jaws, hardened, tongue and groove 97

Errors and corrections are reserved!

Soft top jaws, serration 90°

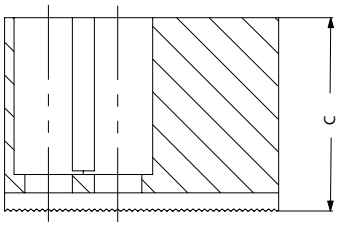

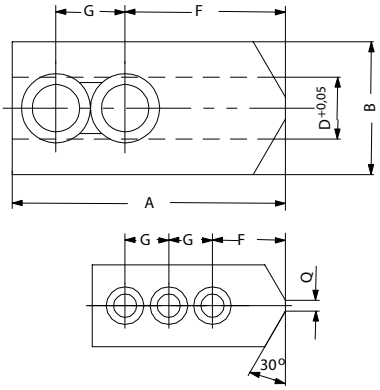

Tool group C 21
Type 543/538 **Soft top jaws, 3-jaw set, can be hardened, serration 90°** - material: 16 MnCr 5

Chuck Type	2-jaw set	3-jaw set	4-jaw set	Jaw length A	Jaw width B	Jaw height C	D	F	G	Q	Serration	Weight approx. kg
AL-D 125/3; AN-D 125/3; BB-D 140/3; BB-D 175/3; BH-D 130/3	**045795** ●	**046403** ●	**046451** ●	55	26,5	38	12	31	15	-	1/16"x 90°	0,32
AP-D 215; AP-D 260; APL-D 215; APL-D 260; NT-D 215; NT-D 260; NTL-D 260	**133147** ●	**133152** ●	**133157** ●	66,7	36,5	53	17	36	19	-	1/16"x 90°	0,7
AL-D 165/3; AN-D 165/3; AP-D 170; BB-D 175/3; BH-D 165/3; BHD-FC 165/3; HFKN-D 165-46; HYND-S 180/3; NT-D 170	-	**585017** ■	-	70	32,5	40	14	38	16,5	5	1/16"x90°	1,7
AL-D 210/3; AN-D 210/3; AP-D 215; AP-D 260; APL-D 215; APL-D 260; BB-D 210/3; BH-D 210/3; BHD-FC 210/3; HFKN-D 210-52; HYND-S 210/3; HYND-S 226/3; NT-D 215; NT-D 260; NTL-D 260	**133148** ●	**133153** ●	**133158** ●	75	36,5	53	17	44	19	-	1/16"x 90°	0,88
AP-D 215; AP-D 260; APL-D 215; APL-D 260; HYND-S 210/3; HYND-S 226/3; NT-D 215; NT-D 260; NTL-D 260	-	**461712** ●	-	75	36,5	65	17	44	19	-	1/16"x90°	3,4
	-	**585021** ■	-	90	36,5	40	17	47	23	5	1/16"x90°	2,7
	-	**894365** ●	-	90	40	60	17	43	22	5	1/16"x90°	4,2
	-	**894357** ■	-	98	35	40	17	61	22	-	1/16"x90°	2,9
AL-D 250/3; AL-D 315/3; AN-D 250/3; AN-D 315/3; AP-D 315; APL-D 315; BB-D 250/3; BB-D 315/3; BH-D 250/3; BHD-FC 250/3; BHD-FC 315; BHD-FC 400/3; HYND-S 250/3; HYND-S 315/3; NT-D 315; NTL-D 315	**133149** ●	**133154** ●	**133159** ●	95	45	54,5	21	55	25	-	1/16"x 90°	1,4
	-	**585531** ●	-	110	50	55,5	21	60	30	-	1/16"x90°	6,3
AL-D 315/3; AN-D 315/3; AP-D 315; APL-D 315; BB-D 315/3; BHD-FC 315; BHD-FC 400/3; HFKN-D 260-72; HFKN-D 315-91; HYND-S 250/3; HYND-S 315/3; NT-D 315; NTL-D 315	**133150** ●	**133155** ●	**133160** ●	103	50	80	21	62	25	-	1/16"x 90°	2,58
	-	**894366** ●	-	120	50	80	21	62	28	-	1/16"x90°	8,9
IN-D 1000/3; IN-D 1250/3	-	**152790** ■	**461716** ■	200	80	89	30	94	42	-	m=2	8,5
AL-D 400/3; AN-D 400/3; AP-D 400; APL-D 400; BH-D 400/3; BH-D 450/3; BH-D 500/3; BH-D 630/3; BH-D 800/3; BHD-FC 400/3; BHD-FC 500/3; BHD-FC 600/3; HFKN-D 400-128; HFKN-D 500-155; IL-D 500/3; IL-D 630/3; IL-D 800/3; IN-D 500/3; IN-D 630/3; IN-D 800/3; NT-D 400; NTL-D 400	**133151** ●	**133156** ●	**133161** ●	130	50	80	25,5	79	31	-	3/32"x 90°	3,1
	-	**118004** ■	-	130	50	80	25,5	20	35	-	3/32"x90°	3,1

● from stock ■ within 4 weeks

Soft top jaws, without mounting holes, serration 90°

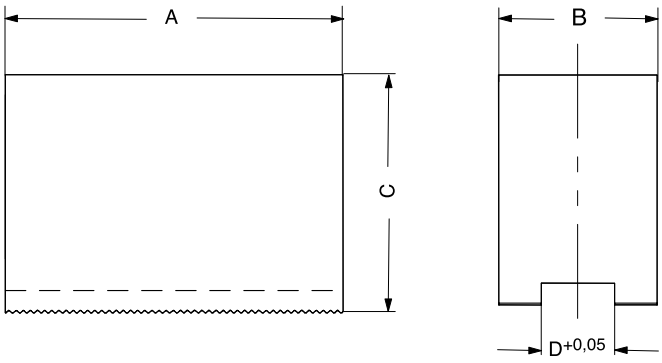

Tool group C 21
Type 543-28 **Soft top jaws, piece, without mounting holes, can be hardened, serration 90°** - material: 16 MnCr 5

Chuck Type	3-jaw set	Jaw length A	Jaw width B	Jaw height C	D	Serration	Weight approx. kg
AL-D 125/2; AL-D 125/3; AN-D 125; AN-D 125/3; BB-D 140/3; BH-D 130/2; BH-D 130/3	**631327** ●	55	26,5	38	12	1/16"x90°	0,4
AL-D 210/2; AL-D 210/3; AN-D 210/2; AN-D 210/3; AP-D 215; AP-D 260; APL-D 215; APL-D 260; BB-D 210/3; BH-D 210/2; BH-D 210/3; BH-D 210/4; BHD-FC 210/3; HFKN-D 210-52; NT-D 215; NT-D 260; NTL-D 260	**667392** ■	90	36,5	53	17	1/16"x90°	1,3
AL-D 210/2; AL-D 210/3; AN-D 210/2; AN-D 210/3; AP-D 215; AP-D 260; APL-D 215; APL-D 260; BB-D 210/3; BH-D 210/2; BH-D 210/3; BH-D 210/4; BHD-FC 210/3; CL-D 200; HFKN-D 210-52; NT-D 215; NT-D 260; NTL-D 260	**155423** ■	105	36,5	53	17	1/16"x90°	1,5
	681620 ■	120	36,5	53	17	1/16"x90°	1,7
AL-D 210/2; AL-D 210/3; AN-D 210/2; AN-D 210/3; AP-D 215; AP-D 260; APL-D 215; APL-D 260; BB-D 210/3; BH-D 210/2; BH-D 210/3; BH-D 210/4; BHD-FC 210/3; HFKN-D 210-52; NT-D 215; NT-D 260; NTL-D 260	**155424** ■	90	45	54,5	17	1/16"x90°	1,7
AL-D 210/2; AL-D 210/3; AN-D 210/2; AN-D 210/3; AP-D 215; AP-D 260; APL-D 215; APL-D 260; BB-D 210/3; BH-D 210/2; BH-D 210/3; BH-D 210/4; BHD-FC 210/3; CL-D 200; HFKN-D 210-52; NT-D 215; NT-D 260; NTL-D 260	**155425** ●	105	45	54,5	17	1/16"x90°	2
AL-D 210/2; AL-D 210/3; AN-D 210/2; AN-D 210/3; AP-D 215; AP-D 260; APL-D 215; APL-D 260; BB-D 210/3; BH-D 210/2; BH-D 210/3; BH-D 210/4; BHD-FC 210/3; CL-D 200; HFKN-D 210-52; HFKN-D 260-72; NT-D 215; NT-D 260; NTL-D 260	**155426** ■	120	45	54,5	17	1/16"x90°	2,2
	155427 ●	90	50	80	17	1/16"x90°	2,6
AL-D 250/2; AL-D 250/3; AL-D 315/2; AL-D 315/3; AN-D 250/2; AN-D 250/3; AN-D 315/2; AN-D 315/3; AP-D 315; APL-D 315; BB-D 250/3; BB-D 315/3; BH-D 250/2; BH-D 250/3; BH-D 250/4; BH-D 315/2; BH-D 315/3; BH-D 315-4; BHD-FC 250/3; BHD-FC 315; BHD-FC 400/3; CL-D 200; CL-D 250; CL-D 315; HFKN-D 315-91; NT-D 315; NTL-D 315	**155428** ●	120	45	54,5	21	1/16"x90°	2,2
	155429 ■	150	45	54,5	21	1/16"x90°	2,7
	667208 ■	120	50	80	21	1/16"x90°	3,5
	155430 ●	150	50	80	21	1/16"x90°	4,4
AL-D 400/2; AL-D 400/3; AL-D 400/4; AN-D 400/2; AN-D 400/3; AN-D 400/4; AP-D 400; APL-D 400; BB-N 400-140; BB-N 460-181; BB-N 500-205; BB-N 500-230; BB-N ES 400-140; BB-N ES 460-181; BB-N ES 500-205; BB-N ES 500-230; BB-N ES 600-275; BB-N ES 630-235; BH-D 400/3; BH-D 400/4; BH-D 450/3; BH-D 450/4; BH-D 500/3; BH-D 630/3; BH-D 800/3; BHD-FC 400/3; BHD-FC 500/3; BHD-FC 600/3; CL-D 250; CL-D 315; HFKN-D 400-128; HFKN-D 500-155; IL-D 500/3; IL-D 500/4; IL-D 630/3; IL-D 630/4; IL-D 800/3; IL-D 800/4; IN-D 800/3; IN-D 800/4; NT-D 400; NTL-D 400	**155431** ■	155	50	80	25,5	1/16"x90°	4,4
	155432 ●	155	68	89	25,5	1/16"x90°	7
	155433 ●	155	68	89	25,5	1/16"x90°	8,7

Soft top jaws, serration 60°

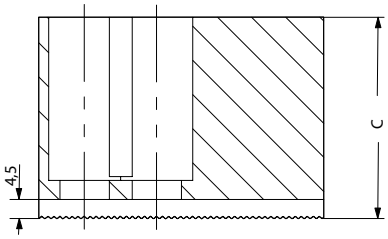

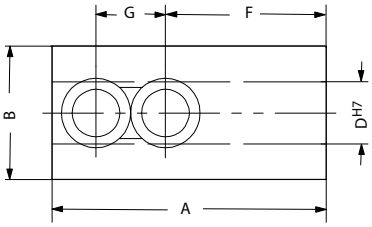

Tool group C 21
Type 543-32 **Soft top jaws, 3-jaw set, can be hardened, serration 60°** - material: 16 MnCr 5

Chuck Type	**3-jaw set**	Jaw length A	Jaw width B	Jaw height C	D	F	G	Serration	Weight approx. kg
AL-M 165/3; AN-M 165/3; AP-M 170; BB-M 175/3; BH-M 165/3; BHM-FC 165/3; HFKN-M 165-46; NT-M 170	**154865** ●	72	30,5	43	12	37	20	1,5 x 60°	0,5
AL-M 210/3; AN-M 210/3; APL-M 215; AP-M 215; BB-M 210/3; BH-M 210/3; BHM-FC 210/3; HFKN-M 210-52; NT-M 215	**154867** ●	95	35	45,5	14	46	25	1,5 x 60°	0,9
AL-M 210/3; AN-M 210/3; BB-M 210/3; BH-M 210/3; BHM-FC 210/3; HFKN-M 210-52	**159780** ■	95	35	45,5	17	46	25	1,5 x 60°	2,7
AL-M 250/3; AN-M 250/3; APL-M 260; AP-M 260; BB-M 250/3; BH-M 250/3; BHM-FC 250/3; HFKN-M 260-72; NTL-M 260; NT-M 260	**154869** ●	110	50	45	16	50	30	1,5 x 60°	1,7
AL-M 315/3; AN-M 315/3; APL-M 315; AP-M 315; BB-M 315/3; BH-M 315/3; BHM-FC 315/3; HFKN-M 260-72; HFKN-M 315-91; NTL-M 315; NT-M 315	**154871** ●	130	50	55,5	21	52	30	1,5 x 60°	1,9

● from stock ■ within 4 weeks

Soft top jaws, serration 60°

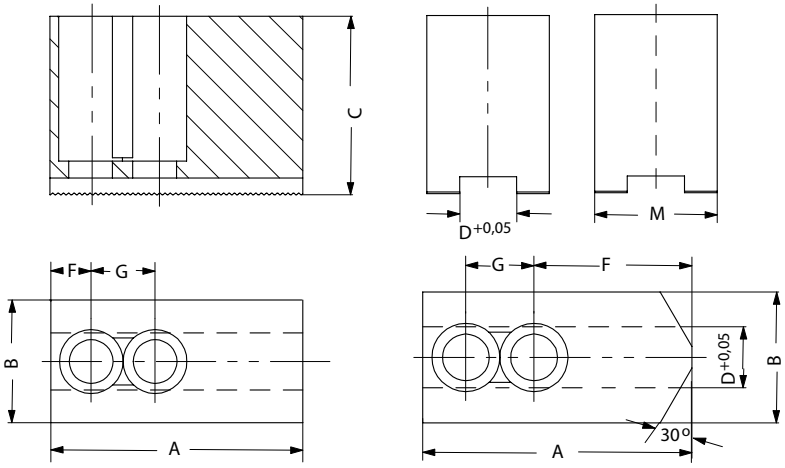

Tool group C 21
Type 530 **Soft top jaws, 3-jaw set, can be hardened, serration 60°** - material: 16 MnCr 5

Chuck Type	2-jaw set	3-jaw set	Jaw length A	Jaw width B	Jaw height C	D	F	G	M	Serration	Weight approx. kg
AL-M 210/3; AN-M 210/3; BB-M 210/3; BH-M 210/3; BHM-FC 210/3; HFKN-M 165-46	**046432** ●	**046411** ●	88,9	36,5	53	14	45	26	34	1,5 x 60°	1,125
AL-M 315/3; AN-M 315/3; APL-M 315; AP-M 315; BB-M 315/3; BH-M 315/3; BHM-FC 315/3; BHM-FC 400/3; HFKN-M 315-91; NTL-M 315; NT-M 315	**046442** ●	**046421** ●	120	50	80	21	67	28	-	1,5 x 60°	3,125

High flexibility and
individual clamping options

With our own construction department and production we are the perfect partner concerning gripping solutions and clamping problems.
For designing the various styles and forms we rely on our experience of more than 100 years.

Drill Chucks
Live Centers
→ Lathe Chucks
Vices
Automation Technology
Power Chuck Technology
Mandrels
Tool Clamping Systems
Special Design

www.roehm.biz

driven by technology

Soft top jaws, tongue and groove, for key bar chucks

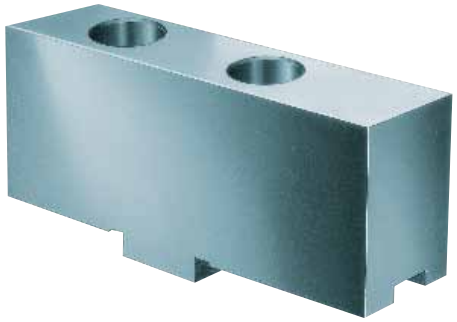

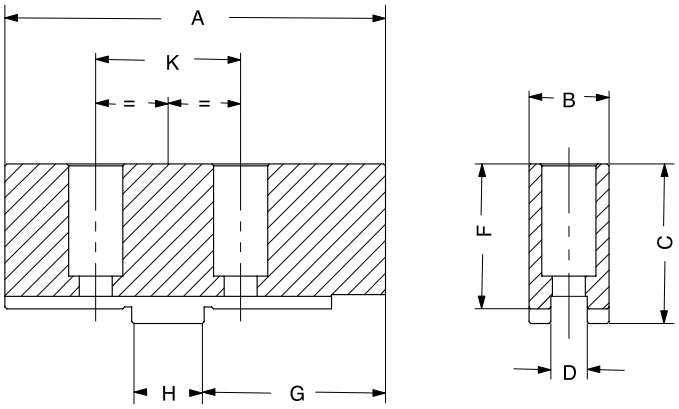

Tool group A28
Type 002 **Unstepped top jaw AB, 3-jaw set, standard design,** soft, material 16MnCr5

Chuck Type	3-jaw set	Jaw length A	Jaw width B	Jaw height C	D	F	G	H	K
HG-F 160-46; HG-N 160-46; KNCS-N 140-35; KNCS-N 170-43	**094008** ●	85	20,3	41	8	36,5	42	18	32
	137055[1] ●	85	24,4	47	8	42,5	42	18	32
HG-F 210-60; HG-N 210-60; KNCS-N 210-52; KNCS-N 255-66; KNCS-NB 210-52; KNCS-NB 225-66	**094009** ●	105	22	45	10	40	50	20	40
HG-F 210-60; HG-N 210-60; HG-N 315-102; KNCS-N 210-52; KNCS-N 255-66; KNCS-N 260-78; KNCS-NB 210-52; KNCS-NB 225-66	**137056**[1] ●	105	34,3	56	10	51	50	20	40
HG-F 260-81; HG-N 260-81; HG-N 315-102; KNCS-N 260-78; KNCS-N 275-86; KNCS-N 325-104; KNCS-N 340-117; KNCS-NB 260-78; KNCS-NB 275-86; KNCS-NB 325-104; KNCS-NB 340-117	**094010** ●	125	30,4	55	12	50	70	20	40
	137057[1] ●	125	50,5	80	12	75	70	20	40
HG-F 315-102; HG-N 400-128; KNCS-N 400-128; KNCS-NB 400-128	**094011** ●	145	34,3	56	12	50	74	26	54
	137058[1] ●	145	50,5	80	12	74	74	26	54
	618098 ●	145	34,3	80	12	75	74	26	54
HG-F 400-128; HG-N 500-165; HG-N 630-254; KNCS-N 500-155; KNCS-N 630-165; KNCS-NB 500-155; KNCS-NB 630-165; KNCS-NB 800-165	**094046** ●	180	50,5	80	18	73	100	30	60

1) extended design

● from stock ■ within 4 weeks

Reversible top jaws, hardened, serration 90°

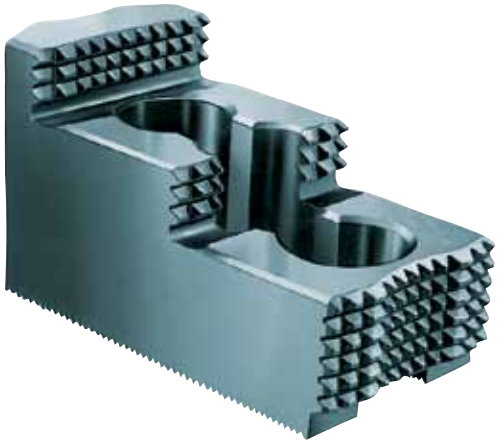

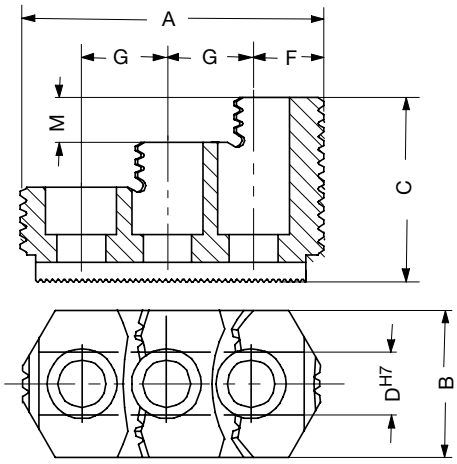

Tool group C 21
Type 543/538 **Reversible top jaws, 3-jaw set, hardened, serration 90°** - material: 16 MnCr 5

Chuck Type	2-jaw set	3-jaw set	4-jaw set	Jaw length A	Jaw width B	Jaw height C	D	F	G	M	Serration	Weight approx. kg
AL-D 125/3; AN-D 125/3; BB-D 140/3; BH-D 130/3	-	**351320** ●	-	51,5	26	26	12	13,5	15	8	1/16”x 90°	0,15
	045796 ●	**046404** ●	**046452** ●	56	26	37,5	12	14	15	10	1/16”x 90°	0,17
AL-D 125/3; AL-D 165/3; AN-D 125/3; AN-D 165/3; AP-D 170; APL-D 215; BB-D 175/3; BH-D 165/3; BHD-FC 165/3; HFKN-D 165-46; HYND-S 180/3	-	**585018** ■	-	68	34,7	45	14	18	16,5	10	1/16”x90°	1,1
AL-D 210/3; AN-D 210/3; AP-D 215; AP-D 260; APL-D 215; APL-D 260; BB-D 210/3; BH-D 210/3; BHD-FC 210/3; NT-D 215; NT-D 260; NTL-D 260	**046429** ●	**046408** ●	**046456** ●	68	34,7	45	17	17	19	10	1/16”x 90°	0,35
	118521 ●	**118522** ●	**118523** ●	75	36	49	17	21,5	19	12	1/16”x 90°	0,46
	-	**609592** ■	-	80	36	37	17	41	19	12	1/16”x 90°	0,235
	-	**585022** ■	-	81	40	49	17	19	23	12	1/16”x90°	1,5
AL-D 250/3; AL-D 315/3; AN-D 250/3; AN-D 315/3; AP-D 315; APL-D 315; BB-D 250/3; BB-D 315/3; BH-D 250/3; BH-D 315/3; BHD-FC 250/3; BHD-FC 315; HFKN-D 260-72; HFKN-D 315-91; HYND-S 250/3; HYND-S 315/3; NT-D 315; NTL-D 315	**046435** ●	**046414** ●	**046462** ●	103,5	50	58	21	33,5	25	14	1/16”x 90°	1,13
	-	**585533** ■	-	104,5	44,5	54	21	25,5	30	13	1/16”x90°	3,2
IN-D 1000/3; IN-D 1250/3	-	**152789** ■	-	200	80	85	30	78	42	13	m=2	6
AL-D 400/3; AN-D 400/3; AP-D 400; APL-D 400; BH-D 400/3; BH-D 450/3; BH-D 630/3; BH-D 800/3; BHD-FC 400/3; BHD-FC 500/3; BHD-FC 600/3; HFKN-D 400-128; HFKN-D 500-155; IL-D 500/3; IL-D 630/3; IL-D 800/3; IN-D 500/3; IN-D 630/3; IN-D 800/3; NT-D 400; NTL-D 400	**046447** ●	**037531** ●	**046474** ●	135	68	65	25,5	48	31+31	26	3/32”x 90°	2,4

Hardened jaws, supplied as supplement or as spares, must be ground on the chuck.

Reversible top jaws, hardened, serration 60°

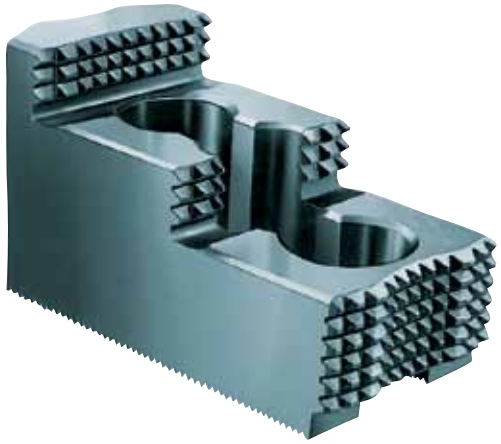

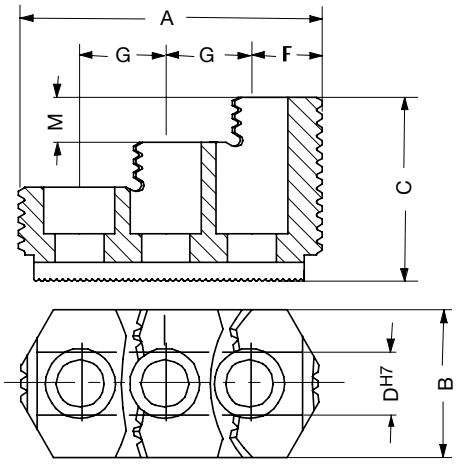

Tool group C 21
Type 543-31 **Reversible top jaws, 3-jaw set, hardened, serration 60°** - material: 16 MnCr 5

Chuck Type	3-jaw set	Jaw length A	Jaw width B	Jaw height C	D	F	G	M	Serration	Weight approx. kg
AL-M 165/3; AN-M 165/3; AP-M 170; BB-M 175/3; BH-M 165/3; BHM-FC 165/3; HFKN-M 165-46; NT-M 170	**154674**[1] ●	66	34,7	36	12	12,5	20	12	1,5 x 60°	0,3
AL-M 210/3; AN-M 210/3; APL-M 215; AP-M 215; BB-M 210/3; BH-M 210/3; BHM-FC 210/3; HFKN-M 210-52; HFKN-M 260-72; NT-M 215	**154676** ●	81	36	49	14	17,5	25	12	1,5 x 60°	0,6
AL-M 210/3; AN-M 210/3; BB-M 210/3; BH-M 210/3; BHM-FC 210/3; HFKN-M 210-52	**159776** ●	81	36	49	17	17,5	25	12	1/16"x60°	0,6
AL-M 250/3; AN-M 250/3; APL-M 260; AP-M 260; BB-M 250/3; BH-M 250/3; BHM-FC 250/3; NTL-M 260; NT-M 260	**154678** ●	99,5	44,5	54	16	25,5	30	13	1,5 x 60°	1,2
AL-M 315/3; AN-M 315/3; APL-M 315; AP-M 315; BB-M 315/3; BH-M 315/3; BHM-FC 315/3; HFKN-M 260-72; HFKN-M 315-91; NTL-M 315; NT-M 315	**154816**[1] ●	103	50	55,5	21	22,5	30	17	1,5 x 60°	1,5

[1] one step only
Hardened jaws, supplied as supplement or as spares, must be ground on the chuck.

Reversible top jaws, hardened, serration 60°

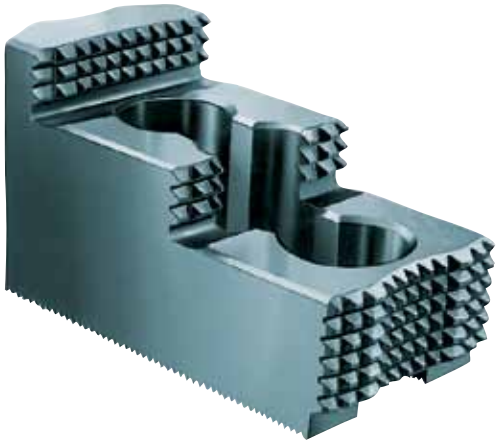

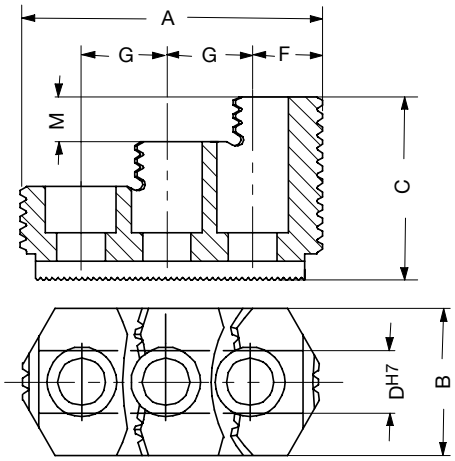

Tool group C 21
Type 530 **Reversible top jaws, 3-jaw set, hardened, serration 60°** - material: 16 MnCr 5

Chuck Type	2-jaw set	3-jaw set	Jaw length A	Jaw width B	Jaw height C	D	F	G	M	Serration	Weight approx. kg
HFKN-M 210-52	**046433** ■	**046412**[1] ■	81	36	52,5	14	25	21	12	1,5 x 60°	0,6
AL-M 315/3; AN-M 315/3; BB-M 315/3; BHM-FC 315/3; BHM-FC 400/3; HFKN-M 315-91	**046443** ●	**046422** ●	112	49,5	61	21	27	33	15	1,5 x 60°	1,55

[1] Near the serration reduced to 34 mm
Hardened jaws, supplied as supplement or as spares, must be ground on the chuck

Reversible top jaws, hardened, tongue and groove

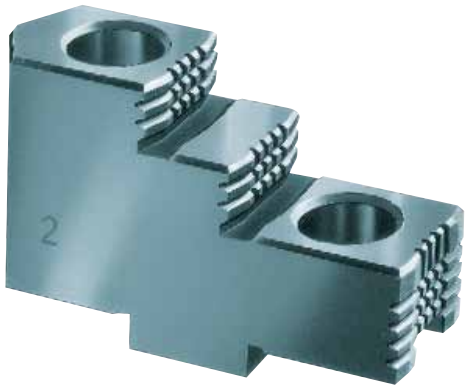

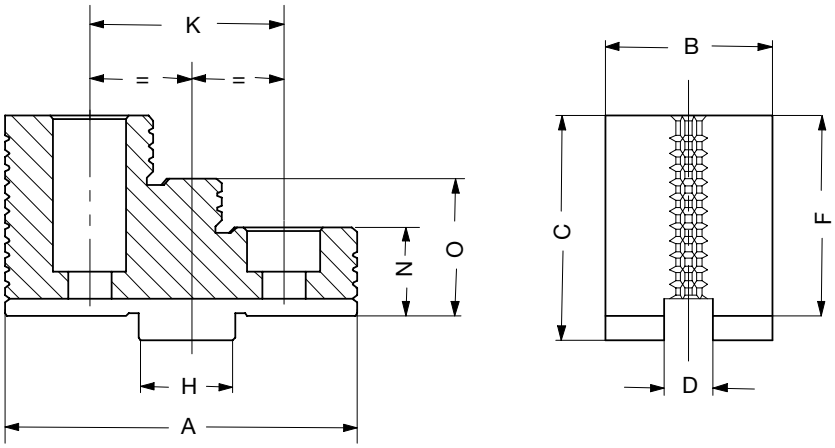

Tool group A 36
Type 530 **Reversible top jaws, 3-jaw set, hardened, tongue and groove,** for **external and internal chucking** - material: 16 MnCr 5

Chuck Type	3-jaw set	Jaw length A	Jaw width B	Jaw height C	D	F	H	K	N	O
HG-F 160-46; HG-N 160-46; KNCS-N 140-35; KNCS-N 170-43	**332774** ■	61,5	20,4	37	8	32,7	18	32	17,7	25,2
	137047 ■	62	24,4	40	8	35,7	18	32	17,7	25,7
	094012 ●	61,5	20,4	37	8	32,5	18	32	17,5	25
HG-F 210-60; HG-N 210-60; KNCS-N 210-52; KNCS-N 255-66; KNCS-NB 210-52; KNCS-NB 225-66	**332775** ■	70,5	24,4	42	10	38	20	40	18	28
	137048	126	34,4	46	10	41	20	40	18	28
	094013 ●	70,5	24,4	43	10	38	20	40	18	28
HG-F 260-81; HG-N 260-81; HG-N 315-102; KNCS-N 260-78; KNCS-N 275-86; KNCS-N 325-104; KNCS-N 340-117; KNCS-NB 260-78; KNCS-NB 275-86; KNCS-NB 325-104; KNCS-NB 340-117	**332776** ■	92	34,4	55	12	50	20	40	22	36
	137049 ■	92	35,7	59	12	54	20	40	22	36
	094014 ●	92	34,4	55	12	50	20	40	22	36
HG-F 315-102; HG-N 400-128; KNCS-N 400-128; KNCS-NB 400-128	**332777** ■	107	37,5	61	12	56	26	54	26	41
	137050 ■	107	50,4	67	12	61	26	54	26	41
	094015 ●	107	35,7	62	12	56	26	54	26	41
HG-F 400-128; HG-N 500-165; HG-N 630-254; KNCS-N 500-155; KNCS-N 630-165; KNCS-NB 500-155; KNCS-NB 630-165; KNCS-NB 800-165	**332778** ■	130	50,4	79	18	72	30	60	32	52
	094045 ●	130	50,4	79	18	72	30	60	32	52
HG-N 630-254; KNCS-N 630-165	**747081** ■	185	68	110	24	102	40	82	42	72
	140715 ●	185	68	110	24	102	40	82	42	72

Stepped and hardened jaws, supplied as supplement or as spares, must be ground on the chuck.

Base jaws GB, hardened, diagonally toothing

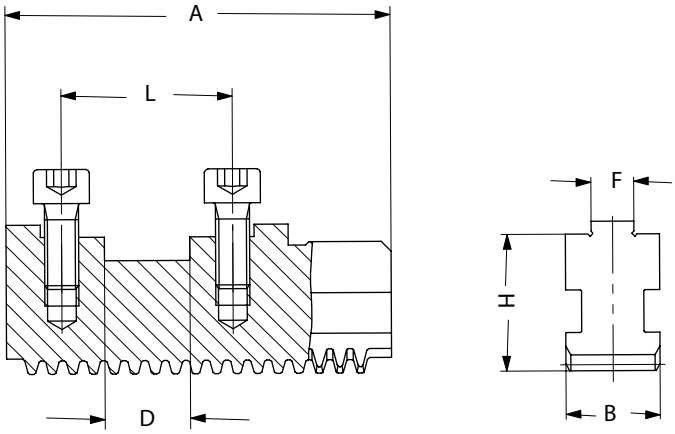

Tool group A28
Type 002 **Base jaw GB, 3-jaw set,** with mounting bolts

Chuck Type	**3-jaw set**	Jaw length A	Jaw width B	D	F	H	L	Weight approx. kg
HG-F 160-46	**094004** ●	74	20	18	8	29,5	32	0,265
HG-F 210-60	**094005** ●	90	22	20	10	35	40	0,365
HG-F 260-81	**094006** ●	110	26	20	12	40	40	0,7
HG-F 315-102	**094007** ●	125	32	26	12	46	54	1,065
HG-F 400-128	**094044** ●	160	45	30	18	52,7	60	2,35

Soft one-piece jaws BL, diagonally toothing

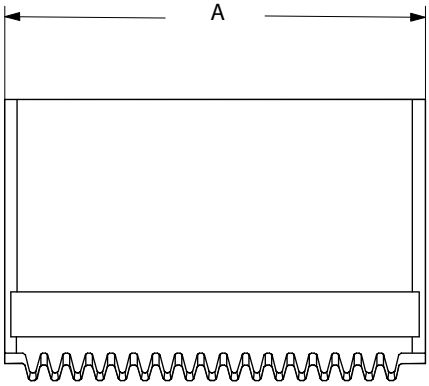

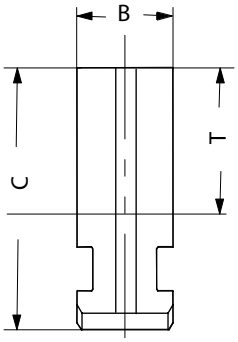

Tool group A28
Type 000 **Unstepped Jaw BL, 3-jaw set,** soft, material 16MnCr5

Chuck Type	3-jaw set	Jaw length A	Jaw width B	Jaw height C	T	Weight approx. kg
HG-F 160-46	**332763** ■	84,5	20	45	24	1,41
HG-F 210-60	**332764** ■	98,4	22	60	35	2,52
	162560 ■	98,4	22	80	55	3,5
	643088 ■	98,4	22	90	65	4
	321444 ■	98,4	22	95	70	4,2
	249678 ●	98,4	22	60	35	0,9
HG-F 260-81	**332765** ■	118,7	26	70	41	4,23
	810394 ■	118,7	26	80	51	5
	162561 ■	118,7	26	90	61	5,7
	810396 ■	118,7	26	100	71	6,4
	616002 ■	70	26	100	71	3,5
	616000 ■	115	26	130	101	8,5
	695681 ■	180	26	140	111	14,3
	249679 ●	118,7	26	70	41	1,535
HG-F 315-102	**332766** ■	136,6	32	79	44,5	7,3
	249680 ●	136,6	32	79	44,5	2,4
HG-F 400-128	**332767** ■	173,6	45	93	54	15,7
	249681 ●	173,6	45	93	54	5

● from stock ■ within 4 weeks

One-piece reversible jaws EB, hardened, diagonally toothing

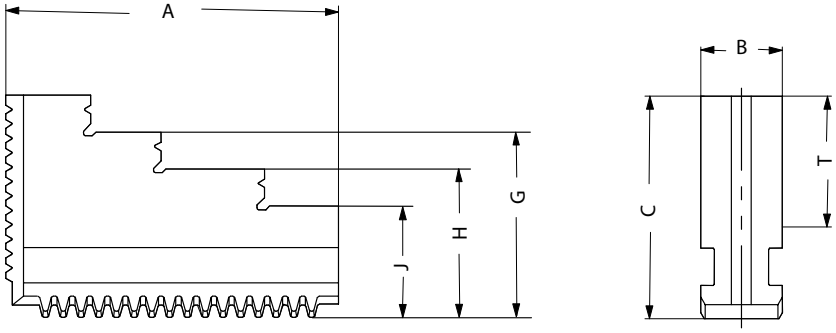

Tool group A28
Type 000 **One-piece jaw EB, 3-jaw set,** hardened

Chuck Type	3-jaw set	Jaw length A	Jaw width B	Jaw height C	G	H	J	T	Weight approx. kg
HG-F 160-46	**332757** ■	77,7	20	45	37,5	30	22,5	24	1,1
	094000 ●	77,7	20	45	37,5	30	22,5	24	0,5
HG-F 210-60	**332758** ■	94,7	22	60	50	40	30	35	1,9
	094001 ●	94,7	22	60	50	40	30	35	0,635
HG-F 260-81	**332759** ■	114	26	70	56	-	42	41	3,3
	094002 ●	114	26	70	56	-	42	41	1,135
HG-F 315-102	**332760** ■	130	32	79	64	-	49	44,5	5,3
	094003 ●	130	32	79	64	-	49	44,5	1,835
HG-F 400-128	**332761** ■	167	45	93	73	-	53	54	10,8
	094043 ●	167	45	93	73	-	53	54	3,665

Stepped and hardened jaws, supplied as supplement or as spares, must be ground on the chuck.
In case of a subsequent jaw delivery please send us the chuck.

Draw-down jaws NB, diagonally toothing

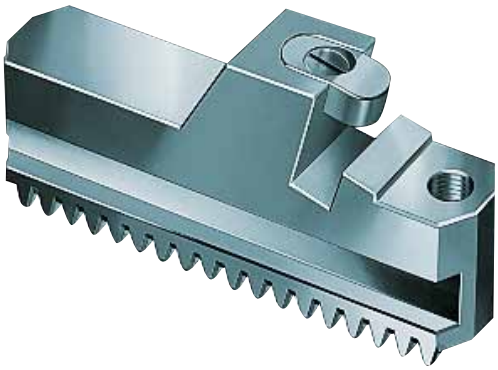

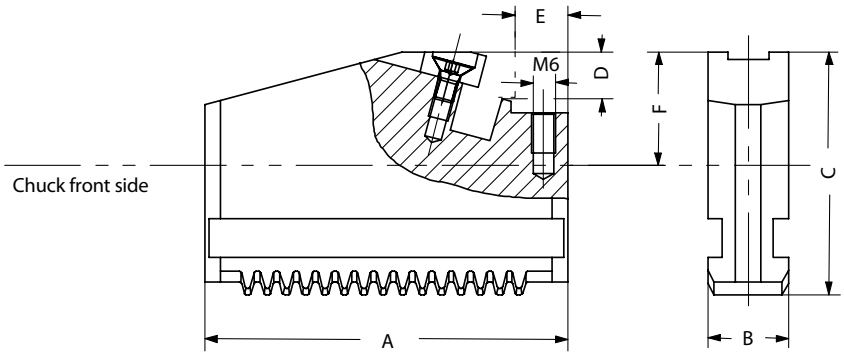

Tool group C 21
Type 545-00 **Draw-down jaws, 1 piece, without clamping inserts**, diagonally toothing,

Chuck Type	Item no.	Jaw length A	Jaw width B	Jaw height C	D	E	F	Thread
HG-F 160-46	**141037** ●	84,4	20	43,5	15	11	22,5	M6
	141038 ●	84,4	20	43,5	15	32	22,5	M6
HG-F 210-60	**141039** ●	98,4	22	47,5	15	12	22,5	M6
	141040 ●	98,4	22	47,5	15	48	22,5	M6
HG-F 260-81	**141041** ●	118,7	26	58,5	20	12	29,5	M6
	141042 ●	118,7	26	58,5	20	58	29,5	M6
HG-F 315-102	**141043** ●	136,4	32	63,9	20	12	29,5	M6
	141044 ●	136,4	32	63,9	20	72	29,5	M6
HG-F 400-128	**141045** ●	173,6	45	73,4	25	12	34,3	M6
	141046 ●	173,6	45	73,4	25	77	34,3	M6

Interchangeable clamping inserts

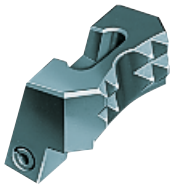

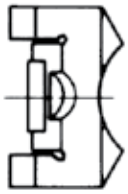

Tool group C 15
Type 545-60 **Interchangeable clamping inserts**, 1 piece, **with claws**

Item no.	Size	Design	Contents of delivery
151029 ●	**140**	with claws	piece
141049 ●	**160/200**	with claws	piece
141052 ●	**250/315**	with claws	piece
141055 ●	**400/500**	with claws	piece

Interchangeable clamping inserts

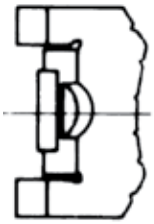

Tool group C 15
Type 545-70 **Interchangeable clamping inserts**, 1 piece, **with serrated toothing**

Item no.	Size	Design	Contents of delivery
151039 ●	**140**	with serrated toothing	piece
141050 ●	**160/200**	with serrated toothing	piece
141053 ●	**250/315**	with serrated toothing	piece
141056 ●	**400/500**	with serrated toothing	piece

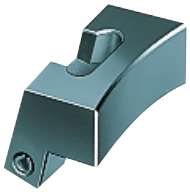

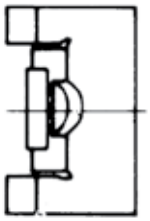

Tool group C 15
Type 545-80 **Interchangeable clamping inserts**, 1 piece, **with heat treatable surface**

Item no.	Size	Design	Contents of delivery
151040 ●	**140**	with heat treatable surface	piece
141051 ●	**160/200**	with heat treatable surface	piece
141054 ●	**250/315**	with heat treatable surface	piece
141057 ●	**400/500**	with heat treatable surface	piece

Tool group C 15
Type 544-00 **Interchangeable workpiece rests**, 1 piece, **in different lengths**

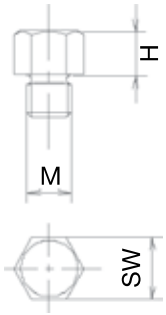

Item no.	Size	M	H	SW
289188 ●	**2**	M6	5	9
138950 ●	**2**	M6	10	9
725581 ●	**2**	M6	15	9

Base jaws GB, hardened, diagonally toothing

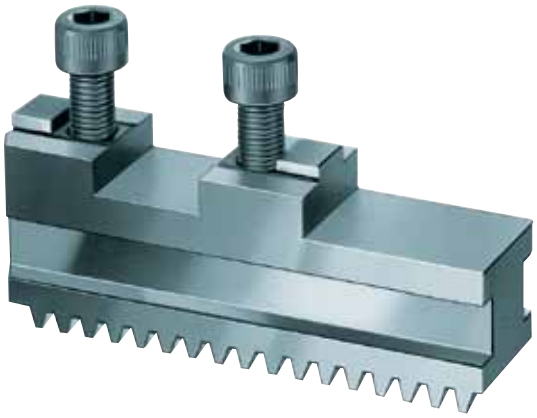

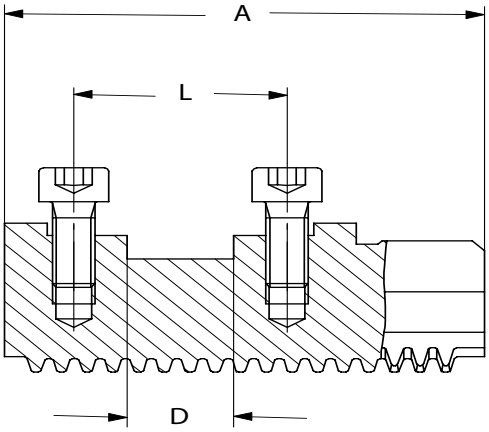

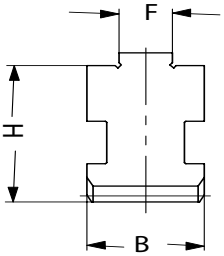

Tool group C 21
Type 574-11 **Base jaws, 3-jaw-set, hardened, straight toothing,** with cylindrical screws DIN 912-12.9

Chuck Type	**3-jaw set**	Jaw length A	Jaw width B	D	F	H	L	Weight approx. kg
HG-N 160-46; KNCS-N 170-43	**463548** ●	65	20	18	8	27,5	32	0,7
HG-N 210-60; KNCS-N 210-52; KNCS-N 255-66	**463549** ●	85	22	20	10	29,5	40	1
HG-N 260-81; K NCS-N 260-78	**463550** ●	104	26	20	12	37	40	1,8
HG-N 315-102	**463551** ●	115	32	20	12	43	40	2,7
HG-N 400-128; KNCS-N 400-128	**463552** ●	125	32	26	12	43	54	3

● from stock ■ within 4 weeks

Soft one-piece jaws BLG, straight toothing

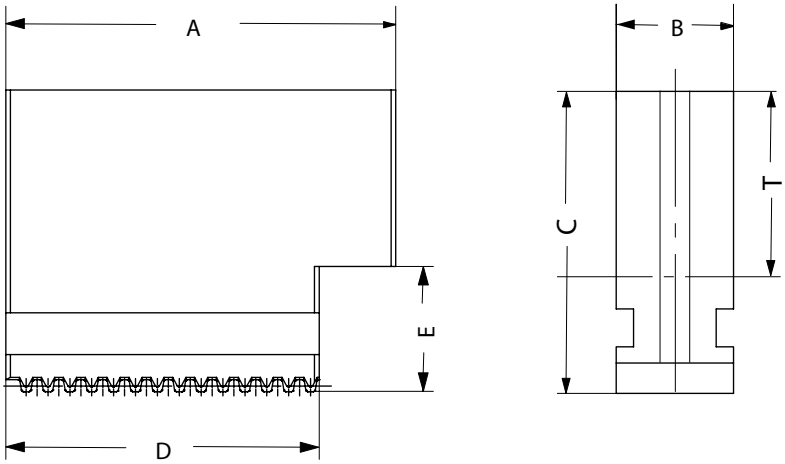

Tool group C 21
Type 574-37 **Soft one-piece jaws, 3-jaw set, can be hardened, straight toothing, guidance hardened and ground** - material: 16 MnCr 5

Chuck Type	**3-jaw set**	Jaw length A	Jaw width B	Jaw height C	D	E	T	Weight approx. kg
HG-N 160-46; KNCS-N 170-43	**463562** ●	65	20	55	56	25	33	1,3
HG-N 210-60; KNCS-N 210-52; KNCS-N 255-66	**463563** ●	84	22	65	67,5	27	38	2,2
HG-N 260-81; KNCS-N 260-78	**463564** ●	99	26	84	77	36	53	4,3
HG-N 315-102; KNCS-N 325-104	**463565** ●	121	32	90	93	41	54	6,7
HG-N 400-128; KNCS-N 400-128	**463566** ●	148	32	100	120	41	64	9,2

One-piece reversible jaws EBG, hardened, straight toothing

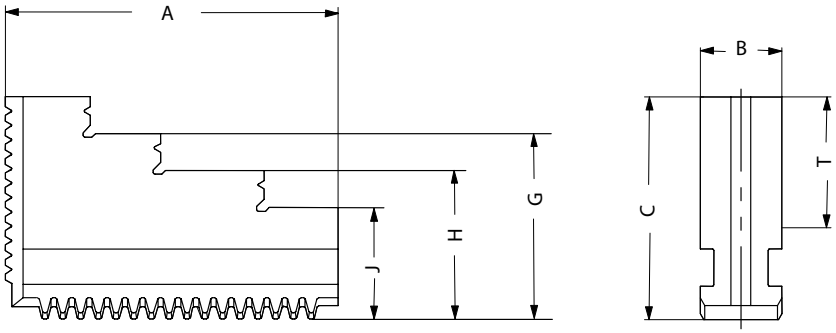

Tool group C 21
Type 574-27 **One-piece reversible jaws, 3-jaw set, hardened, straight toothing** - material: 16 MnCr 5

Chuck Type	3-jaw set	Jaw length A	Jaw width B	Jaw height C	G	H	J	T	Weight approx. kg
HG-N 160-46; KNCS-N 170-43	**463555** ●	58	20	44	37	30	23	23	0,6
HG-N 210-60; KNCS-N 210-52; KNCS-N 255-66	**463556** ●	75	22	51	43	35	27	26	1,3
HG-N 260-81; KNCS-N 260-78	**463557** ●	90	26	60	50	40	30	31	2
HG-N 315-102; KNCS-N 325-104	**463558** ●	117	32	66	56	46	36	32	3,4
HG-N 400-128; KNCS-N 400-128	**463559** ●	137	32	70	59	48	37	36	4,9

Hardened jaws, supplied as supplement or as spares, must be ground on the chuck.

Draw-down jaws NBG, straight toothing

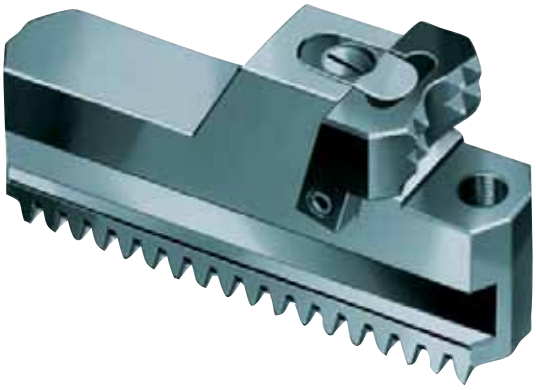

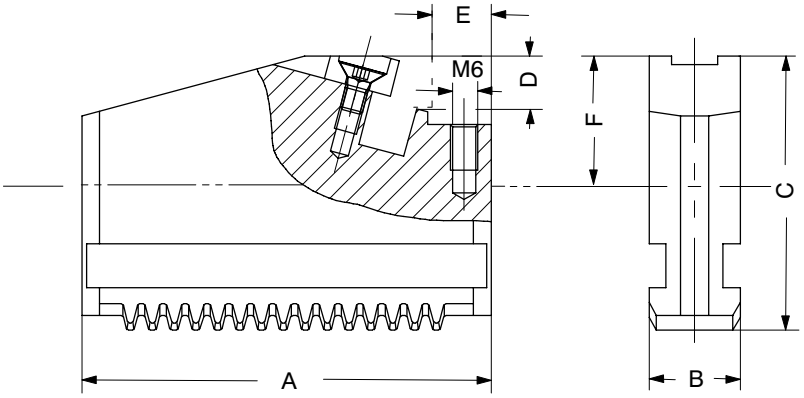

Tool group C 21
Type 545-30 **Draw-down jaws, 1 piece, for interchangeable clamping inserts, straight toothing,** without clamping inserts

Chuck Type	Item no.	Jaw length A	Jaw width B	Jaw height C	D	E	F	Thread
HG-N 160-46; KNCS-N 170-43	**485522** ●	65	20	43	15	11	22,5	M6
	485523 ●	72	20	43	15	30	22,5	M6
HG-N 210-60; KNCS-N 210-52; KNCS-N 255-66	**485524** ●	85	22	47	15	12	22,5	M6
	485525 ●	95	22	47	15	45	22,5	M6
HG-N 260-81; KNCS-N 260-78	**485526** ●	104	26	58	20	12	29,5	M6
	485527 ●	104	26	58	20	50,5	29,5	M6
HG-N 315-102; KNCS-N 325-104	**485528** ●	115	32	63	20	12	29,5	M6
	485529 ●	123	32	63	20	61,5	29,5	M6
HG-N 400-128; KNCS-N 400-128	**485530** ●	125	32	63	20	12	29,5	M6
	485531 ●	134	32	63	20	67	29,5	M6
HG-N 500-165; KNCS-N 500-155	**485532** ■	160	45	81	20	12	34	M6
	485533 ■	160	45	81	25	96	34	M6

Interchangeable clamping inserts

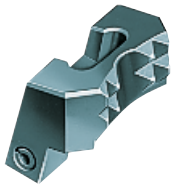

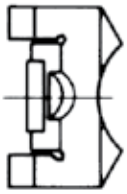

Tool group C 15
Type 545-60 **Interchangeable clamping inserts**, 1 piece, **with claws**

Item no.	Size	Design	Contents of delivery
151029 ●	**140**	with claws	piece
141049 ●	**160/200**	with claws	piece
141052 ●	**250/315**	with claws	piece
141055 ●	**400/500**	with claws	piece

Interchangeable clamping inserts

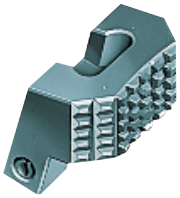

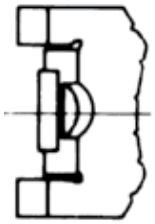

Tool group C 15
Type 545-70 **Interchangeable clamping inserts**, 1 piece, **with serrated toothing**

Item no.	Size	Design	Contents of delivery
151039 ●	**140**	with serrated toothing	piece
141050 ●	**160/200**	with serrated toothing	piece
141053 ●	**250/315**	with serrated toothing	piece
141056 ●	**400/500**	with serrated toothing	piece

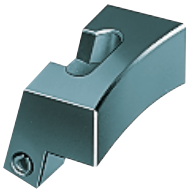

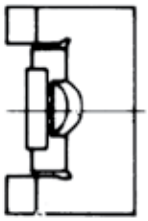

Tool group C 15
Type 545-80 **Interchangeable clamping inserts**, 1 piece, **with heat treatable surface**

Item no.	Size	Design	Contents of delivery
151040 ●	**140**	with heat treatable surface	piece
141051 ●	**160/200**	with heat treatable surface	piece
141054 ●	**250/315**	with heat treatable surface	piece
141057 ●	**400/500**	with heat treatable surface	piece

Tool group C 15
Type 544-00 **Interchangeable workpiece rests**, 1 piece, **in different lengths**

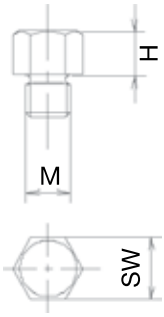

Item no.	Size	M	H	SW
289188 ●	**2**	M6	5	9
138950 ●	**2**	M6	10	9
725581 ●	**2**	M6	15	9

Claw-type jaws, hardened, serration 90°, groove 17 - 25,5

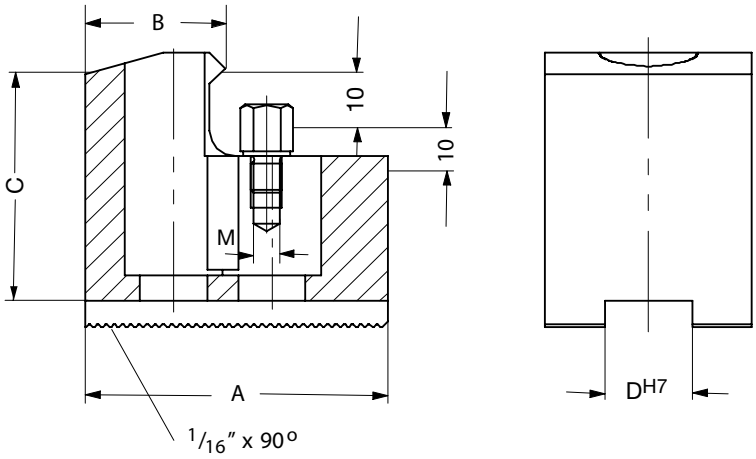

Tool group C 21
Type 544-50 **Claw-type jaws**, 1 piece, **hardened**, **serration 90°** - width of the groove **17 - 25,5**

Chuck Type	Item no.	Jaw length A	B	Jaw height C	D	Thread
AL-D 210/2; AL-D 210/3; AN-D 210/3; AP-D 215; AP-D 260; APL-D 215; APL-D 260; BB-D 210/3; BH-D 210/2; BH-D 210/3; BH-D 210/4; BHD-FC 210/3; HFKN-D 210-52; NT-D 215; NT-D 260; NTL-D 260	137031 ●	67	53	45	17	M6
	137032 ●	65	46	45	17	M6
	137033 ●	55	39	45	17	M6
	137034 ●	50	31	45	17	M6
	137035 ●	55	27	45	17	M6
	137036 ●	65	19	45	17	M6
	137037 ●	65	26	45	17	M6
	137038 ●	55	24	45	17	M6
	137039 ●	55	40	45	17	M6
AL-D 125/2; AL-D 125/3; AN-D 125; AN-D 125/3; BB-D 140/3; BH-D 130/2; BH-D 130/3	144320 ●	66	52	38	12	M6
	144321 ●	56	34	38	12	M6
	144322 ●	66	25	38	12	M6
AL-D 250/2; AL-D 250/3; AL-D 315/3; AN-D 250/2; AN-D 250/3; AN-D 315/2; AN-D 315/3; AP-D 315; APL-D 315; BB-D 250/3; BB-D 315/3; BH-D 250/2; BH-D 250/3; BH-D 250/4; BH-D 315/2; BH-D 315/3; BH-D 315-4; BHD-FC 250/3; BHD-FC 315; BHD-FC 400/3; HFKN-D 260-72; HFKN-D 315-91; NT-D 315; NTL-D 315	137041 ●	95	80	50	21	M6
	137042 ●	75	60	50	21	M6
	137043 ●	60	43	50	21	M6
	137044 ●	70	37	50	21	M6
	137045 ●	95	25	50	21	M6
	137046 ●	80	30	50	21	M6
AL-D 400/2; AL-D 400/3; AL-D 400/4; AN-D 400/2; AN-D 400/3; AN-D 400/4; AP-D 400; APL-D 400; BH-D 400/3; BH-D 400/4; BH-D 450/3; BH-D 450/4; BH-D 500/3; BH-D 630/3; BH-D 800/3; BHD-FC 400/3; BHD-FC 500/3; HFKN-D 400-128; HFKN-D 500-155; IL-D 500/3; IL-D 500/4; IL-D 630/3; IL-D 630/4; IL-D 800/3; IL-D 800/4; IN-D 500/3; IN-D 500/4; IN-D 630/3; IN-D 630/4; IN-D 800/3; IN-D 800/4; NT-D 400; NTL-D 400	137051 ●	130	113	65	25,5	M6
	137052 ●	90	67	65	25,5	M6
	137053 ●	100	45	65	25,5	M6
	137054 ●	130	33	65	25,5	M6

Tool group C 15
Type 544-00 **Interchangeable workpiece rests**, 1 piece, **in different lengths**

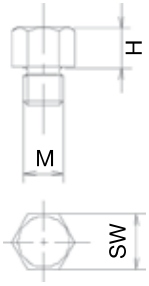

Item no.	Size	M	H	SW
147263 ●	1	M5	5	7
139177 ●	1	M5	8	7
298191 ●	1	M5	10	7
289188 ●	2	M6	5	9
138950 ●	2	M6	10	9
725581 ●	2	M6	15	9

Claw-type jaws, hardened, serration 60°

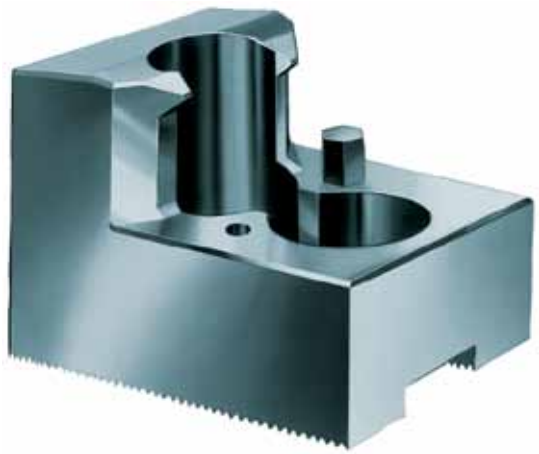

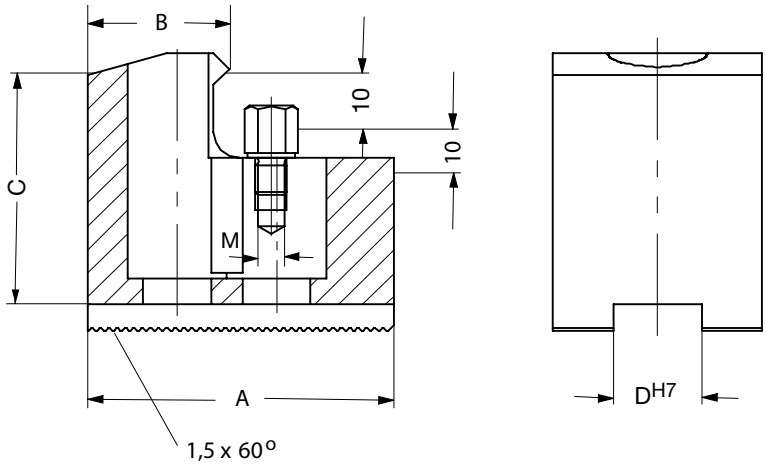

Tool group C 21
Type 543-33 **Claw-type jaws**, 1 piece, **hardened**, **serration 60°** - width of the groove **12 - 16**

Chuck Type	Item no.	Jaw length A	B	Jaw height C	D	Thread
AL-M 165/2; AL-M 165/3; AN-M 165/2; AN-M 165/3; AP-M 170; BB-M 175/3; BH-M 165/2; BH-M 165/3; BH-M 165/4; BHM-FC 165/3; HFKN-M 165-46; NT-M 170	**156025** ■	**67**	53	45	12	M6
	156027 ■	**65**	46	45	12	M6
	156029 ■	**55**	40	45	12	M6
	161189 ■	**55**	24	45	12	M6
AL-M 250/2; AL-M 250/3; AN-M 250/2; AN-M 250/3; APL-M 260; AP-M 260; BB-M 250/3; BH-M 250/2; BH-M 250/3; BH-M 250/4; BHM-FC 250/3; HFKN-M 260-72; NTL-M 260; NT-M 260	**156099** ●	**95**	80	50	16	M6
	156101 ●	**75**	60	50	16	M6
	156103 ●	**60**	43	50	16	M6
	156105 ●	**70**	37	50	16	M6

Tool group C 15
Type 544-00 **Interchangeable workpiece rests**, 1 piece, **in different lengths**

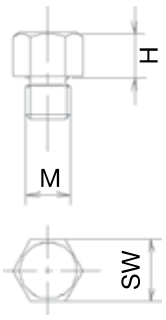

Item no.	Size	M	H	SW
289188 ●	**2**	M6	5	9
138950 ●	**2**	M6	10	9
725581 ●	**2**	M6	15	9

● from stock ■ within 4 weeks

Claw-type jaws, hardened, tongue and groove

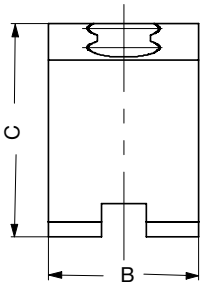

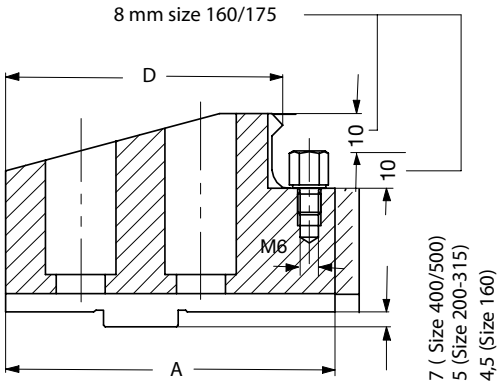

Tool group C 21
Type 544-00 **Reversible claw-type top jaws,** tongue and groove, 1 piece, hardened

Chuck Type	Item no.	Jaw length A	Jaw width B	Jaw height C	D	Max. swing
HG-F 160-46; HG-N 160-46; KNCS-N 140-35; KNCS-N 170-43	**137060** ●	**66**	24	37,5	17	190
	137061 ●	**66**	20	37,5	61	190
	137062 ●	**56**	20	37,5	29	190
HG-F 210-60; HG-N 210-60; KNCS-N 210-52; KNCS-N 255-66; KNCS-NB 210-52; KNCS-NB 225-66	**137064** ●	**81**	24	43	71	280
	137065 ●	**66**	24	43	38,5	280
	137066 ●	**79**	34	43	29,5	280
	137067 ●	**81**	34	43	71	280
	137068 ●	**66**	34	43	38,5	280
HG-F 260-81; HG-N 260-81; HG-N 315-102; KNCS-N 260-78; KNCS-N 275-86; KNCS-N 325-104; KNCS-N 340-117; KNCS-NB 260-78; KNCS-NB 275-86; KNCS-NB 325-104; KNCS-NB 340-117	**137108** ●	**90**	34	55	78	330
	137109 ●	**72**	34	55	38	330
	137110 ●	**80**	50	55	29	330
	137111 ●	**90**	50	55	78	330
	137112 ●	**72**	50	55	38	330
HG-F 315-102; HG-N 400-128; KNCS-N 400-128; KNCS-NB 400-128	**137114** ●	**100**	34	62	90	404
	137115 ●	**86**	34	62	42	404
	137116 ●	**93**	50	62	30	404
	137117 ●	**106**	50	62	90	404
	137118 ●	**86**	50	62	42	404
HG-F 400-128; KNCS-N 500-155; KNCS-N 630-165; KNCS-NB 500-155; KNCS-NB 630-165	**137119** ●	**124**	50	62	39	570
	137120 ●	**124**	50	62	112	506
	137121 ●	**100**	50	62	48	506

Tool group C 15
Type 544-00 **Interchangeable workpiece rests**, 1 piece, **in different lengths**

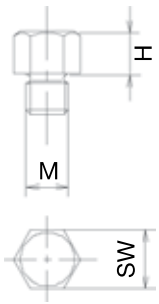

Item no.	Size	M	H	SW
289188 ●	**2**	M6	5	9
138950 ●	**2**	M6	10	9
725581 ●	**2**	M6	15	9

Choose the right clamping jaw from a wide range of jaws quickly and simply.
All well-established jaw types from one-piece jaws and reversible top jaws to claw jaws and draw-down jaws, can be found in this catalogue or with the jaw finder www.jawfinder.biz

Find your clamping jaw quickly and simply at www.jawfinder.biz

Forkardt

Soft top jaws, serration 90° 100
Soft top jaws, without mounting holes, serration 90° 101
Soft top jaws, tongue and groove, 120° bevelled 102
Soft top jaws, tongue and groove, for key bar chucks 103
Reversible top jaws, hardened, serration 90° 104
Reversible top jaws, hardened, tongue and groove 105
Base jaws GB, hardened, diagonally toothing 106
Soft one-piece jaws BL, diagonally toothing 107
One-piece reversible jaws EB, hardened, diagonally toothing 108
Draw-down jaws NB, diagonally toothing 109
Claw-type jaws, hardened, serration 90° 111
Claw-type jaws, hardened, tongue and groove 112
Soft segment top jaws, serration 90° 113

Errors and corrections are reserved!

Soft top jaws, serration 90°

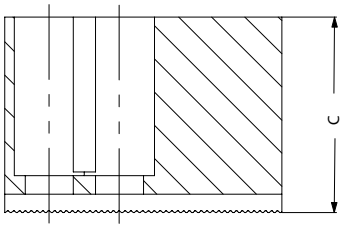

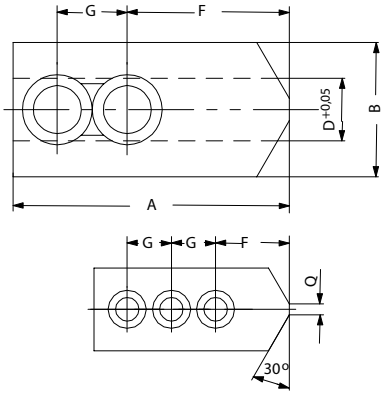

Tool group C 21
Type 543/538 **Soft top jaws, set, can be hardened, serration 90°** - material: 16 MnCr 5

Chuck Type	2-jaw set	3-jaw set	4-jaw set	Jaw length A	Jaw width B	Jaw height C	D	F	G	Q	Serration	Weight approx. kg
KTH 130; KTH 140	**045795** ●	**046403** ●	**046451** ●	55	26,5	38	12	31	15		1/16”x 90°	0,32
3KTG 160; 3KTG 200; 3KTN 160; 3KTN 200; 3QLC 160-38; 3QLK 160-38; AG 160; AG 200; AG 250; KG 200; KGH 160; KGH 175; KGH 200; KGHF 160; KGHF 175; KL 160; KL 200; KLNC 200; KP 200; KS 160; KS 200; KS 250; KSF 175; KSF 200; KSH 160; KSH 200; KSHF 200; KSPS 160; KSPS 200; KT 160; KT 200; KTF 200; KTGF 200; KTH 160; KTH 200; KTH 250; KTH 315; NH 160; NH 175; NH 200; NHF 160; NHF 175; NHF 200; UVE 160; UVE 200; UVE 250	**133147** ●	**133152** ●	**133157** ●	66,7	36,5	53	17	36	19	-	1/16”x 90°	0,7
3KTG 160; 3KTG 200; 3KTN 160; 3KTN 200; AG 160; AG 200; AG 250; KG 200; KGH 160; KGH 175; KGH 200; KL 160; KL 200; KLNC 200; KP 200; KS 160; KS 200; KS 250; KSF 175; KSF 200; KSH 160; KSH 200; KSHF 200; KSPS 160; KSPS 200; KT 160; KT 200; KTF 200; KTGF 200; KTH 200; KTH 250; KTH 315; NH 200; NHF 200; UVE 160; UVE 200; UVE 250	-	**046407** ■	-	66,7	36,5	53	17	33	22		1/16”x90°	2,1
3KTG 200; 3KTN 200; 3QLC 200-54; 3QLC-KS 200-77; 3QLC-KS 250-101; 3QLK 200-54; 3QLK-KS 200-77; 3QLK-KS 250-101; KG 200; KGH 200; KGHF 200; KL 200; KL 250; KLNC 200; KP 200; KS 200; KS 250; KSF 200; KSH 200; KSHF 200; KSHF 250; KSPS 200; KT 160; KT 200; KTF 200; KTGF 200; KTH 200; KTH 250; KTH 315; NH 200; NHF 200; NHF 250; NHF 290; UVE 200; UVE 250	**133148** ●	**133153** ●	**133158** ●	75	36,5	53	17	44	19	-	1/16”x 90°	0,88
3KTG 200; 3KTN 200; KG 200; KGH 200; KGHF 200; KL 200; KL 250; KLNC 200; KP 200; KS 200; KS 250; KSF 200; KSH 200; KSHF 200; KSHF 250; KSPS 200; KT 160; KT 200; KTF 200; KTGF 200; KTH 200; KTH 250; KTH 315; NH 200; NHF 200; NHF 250; NHF 290; UVE 200; UVE 250	-	**118000** ■	-	75	36,5	53	17	41	22		1/16”x90°	2,7
3KTG 200; 3KTN 200; 3QLC 200-54; 3QLC-KS 200-77; 3QLC-KS 250-101; 3QLK 200-54; 3QLK-KS 200-77; 3QLK-KS 250-101; KG 200; KGH 200; KGHF 200; KL 200; KL 250; KLNC 200; KP 200; KS 200; KS 250; KSF 200; KSH 200; KSHF 200; KSHF 250; KSPS 200; KT 160; KT 200; KTF 200; KTGF 200; KTH 200; KTH 250; KTH 315; NH 200; NHF 200; NHF 250; NHF 290; UVE 200; UVE 250	-	**461712** ●	-	75	36,5	65	17	44	19		1/16”x90°	3,4
	-	**585021** ■	-	90	36,5	40	17	47	23	5	1/16”x90°	2,7
	-	**894365** ●	-	90	40	60	17	43	22	5	1/16”x90°	4,2
	-	**894357** ■	-	98	35	40	17	61	22		1/16”x90°	2,9
2BLN 200; 3KTG 250; 3KTG 315; 3KTN 250; 3KTN 315; 3QLC 250-72; 3QLC 315/88; 3QLC-KS 315-135; 3QLC-KS 400-168; 3QLK 250-72; 3QLK 315/88; 3QLK-KS 315-135; 3QLK-KS 400-168; KG 250; KG 315; KL 250; KLNC 250; KLNC 315; KP 250; KP 315; KS 315; KS 400; KSH 250; KSH 315; KSH 400; KSHF 250; KSHF 315; KSHF 400; KSPS 250; KSPS 300; KT 250; KT 315; KTF 250; KTF 315; KTGF 250; KTGF 315; NH 250; NH 315; NHF 250; NHF 290; NHF 315; NHF 400; UVE 315	**133149** ●	**133154** ●	**133159** ●	95	45	54,5	21	55	25	-	1/16”x 90°	1,4
	-	**585531** ●	-	110	50	55,5	21	60	30		1/16”x90°	6,3
3KTG 250; 3KTG 315; 3KTN 250; 3KTN 315; 3QLC-KS 315-135; 3QLC-KS 400-168; 3QLK-KS 315-135; 3QLK-KS 400-168; KG 250; KG 315; KL 250; KLNC 250; KLNC 315; KP 250; KP 315; KS 315; KS 400; KSH 250; KSH 315; KSH 400; KSHF 250; KSHF 315; KSHF 400; KSPS 250; KSPS 300; KT 250; KT 315; KTF 250; KTF 315; KTGF 250; KTGF 315; NH 250; NH 315; NHF 250; NHF 290; NHF 315; NHF 400; UVE 315	**133150** ●	**133155** ●	**133160** ●	103	50	80	21	62	25	-	1/16”x 90°	2,58
	-	**894366** ●	-	120	50	80	21	62	28		1/16”x90°	8,9
3KTG 400; 3KTG 500; 3KTN 400; 3KTN 500; 3QLC 400-126; 3QLK 400-126; KG 400; KG 500; KL 400; KL 500; KLNC 400; KLNC 500; KP 400; KP 500; KS 500; KS 630; KSH 500; KSHF 630; KSPS 400; KT 400; KT 500; KT 630; KTF 400; KTF 500; KTGF 400; KTGF 500; KTGF 630; NH 400; NH 500; NH 630; NHF 400; NHF 500; NHF 630; UVE 400; UVE 500; UVE 630; UVE 800	**133151** ●	**133156** ●	**133161** ●	130	50	80	25,5	79	31	-	3/32”x 90°	3,1
	-	**118004** ■	-	130	50	80	25,5	20	35		3/32”x90°	3,1

Soft top jaws, without mounting holes, serration 90°

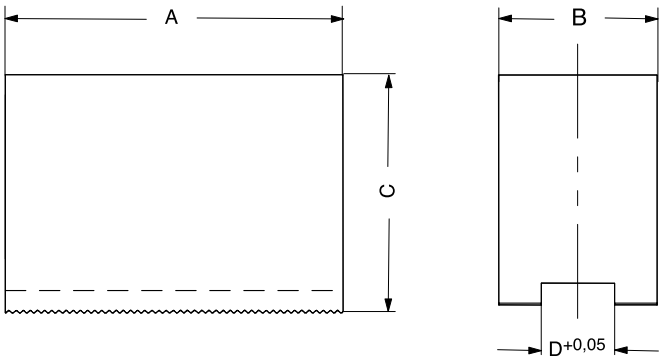

Tool group C 21
Type 543-28 **Soft top jaws, piece, without mounting holes, can be hardened, serration 90°** - material: 16 MnCr 5

Chuck Type	Item no.	Jaw length A	Jaw width B	Jaw height C	D	Serration	Weight approx. kg
KTHS 130; KTHS 140	**631327** ●	55	26,5	38	12	1/16”x90°	0,4
3KTG 160; 3KTG 200; 3KTN 160; 3KTN 200; 3QLC 160-38; 3QLC 200-54; 3QLC-KS 200-77; 3QLK 160-38; 3QLK 200-54; 3QLK-KS 200-77; AG 160; AG 200; AG 250; KG 200; KGH 160; KGH 175; KGH 200; KGHF 160; KGHF 175; KGHF 200; KL 160; KL 200; KLNC 200; KP 200; KS 160; KS 200; KS 250; KSF 175; KSF 200; KSH 160; KSH 200; KSHF 200; KSPS 160; KSPS 200; KT 160; KT 200; KTF 200; KTGF 200; KTH 160; KTH 175; KTH 200; KTH 250; KTH 315; NH 160; NH 175; NH 200; NHF 160; NHF 175; NHF 200; UVE 160; UVE 200; UVE 250	**667392** ■	90	36,5	53	17	1/16”x90°	1,3
3KTG 160; 3KTG 200; 3KTN 160; 3KTN 200; 3QLC 160-38; 3QLC 200-54; 3QLC-KS 200-77; 3QLC-KS 250-101; 3QLK 160-38; 3QLK 200-54; 3QLK-KS 200-77; 3QLK-KS 250-101; AG 160; AG 200; AG 250; KG 200; KGH 160; KGH 175; KGH 200; KGHF 160; KGHF 175; KGHF 200; KL 160; KL 200; KL 250; KLNC 200; KP 200; KS 160; KS 200; KS 250; KSF 175; KSF 200; KSH 160; KSH 200; KSHF 200; KSHF 250; KSPS 160; KSPS 200; KT 160; KT 200; KTF 200; KTGF 200; KTH 160; KTH 175; KTH 200; KTH 250; KTH 315; NH 160; NH 175; NH 200; NHF 160; NHF 175; NHF 200; NHF 250; NHF 290; UVE 160; UVE 200; UVE 250	**155423** ■	105	36,5	53	17	1/16”x90°	1,5
	681620 ■	120	36,5	53	17	1/16”x90°	1,7
3KTG 160; 3KTG 200; 3KTN 160; 3KTN 200; 3QLC 160-38; 3QLC 200-54; 3QLC-KS 200-77; 3QLK 160-38; 3QLK 200-54; 3QLK-KS 200-77; AG 160; AG 200; AG 250; KG 200; KGH 160; KGH 175; KGH 200; KGHF 160; KGHF 175; KGHF 200; KL 160; KL 200; KLNC 200; KP 200; KS 160; KS 200; KS 250; KSF 175; KSF 200; KSH 160; KSH 200; KSHF 200; KSPS 160; KSPS 200; KT 160; KT 200; KTF 200; KTGF 200; KTH 160; KTH 175; KTH 200; KTH 250; KTH 315; NH 160; NH 175; NH 200; NHF 160; NHF 175; NHF 200; NHF 250; NHF 290; UVE 160; UVE 200; UVE 250	**155424**	90	45	54,5	17	1/16”x90°	1,7
3KTG 160; 3KTG 200; 3KTN 160; 3KTN 200; 3QLC 160-38; 3QLC 200-54; 3QLC-KS 200-77; 3QLC-KS 250-101; 3QLK 160-38; 3QLK 200-54; 3QLK-KS 200-77; 3QLK-KS 250-101; AG 160; AG 200; AG 250; KG 200; KGH 160; KGH 175; KGH 200; KGHF 160; KGHF 175; KGHF 200; KL 160; KL 200; KL 250; KLNC 200; KP 200; KS 160; KS 200; KS 250; KSF 175; KSF 200; KSH 160; KSH 200; KSHF 200; KSHF 250; KSPS 160; KSPS 200; KT 160; KT 200; KTF 200; KTGF 200; KTH 160; KTH 175; KTH 200; KTH 250; KTH 315; NH 160; NH 175; NH 200; NHF 160; NHF 175; NHF 200; NHF 250; NHF 290; UVE 160; UVE 200; UVE 250	**155425** ●	105	45	54,5	17	1/16”x90°	2
3KTG 200; 3KTN 200; 3QLC 200-54; 3QLC-KS 200-77; 3QLC-KS 250-101; 3QLK 200-54; 3QLK-KS 200-77; 3QLK-KS 250-101; AG 200; AG 250; KG 200; KGH 200; KGHF 200; KL 200; KL 250; KLNC 200; KP 200; KS 200; KS 250; KSF 200; KSH 200; KSHF 200; KSHF 250; KSPS 200; KT 200; KTF 200; KTGF 200; KTH 200; KTH 250; NH 200; NHF 200; NHF 250; NHF 290; UVE 200; UVE 250	**155426** ■	120	45	54,5	17	1/16”x90°	2,2
	155427 ●	90	50	80	17	1/16”x90°	2,6
2BLN 200; 2KTG 250; 2KTG 315; 2KTN 250; 2KTN 315; 3KTG 250; 3KTG 315; 3KTN 250; 3KTN 315; 3QLC 250-72; 3QLC 315/88; 3QLC-KS 315-135; 3QLC-KS 400-168; 3QLK 250-72; 3QLK 315/88; 3QLK-KS 315-135; 3QLK-KS 400-168; 4KTG 250; 4KTG 315; 4KTN 250; 4KTN 315; KG 250; KG 315; KL 250; KLNC 250; KLNC 315; KP 250; KP 315; KS 315; KS 400; KSH 250; KSH 315; KSH 400; KSHF 250; KSHF 315; KSHF 400; KSPS 250; KSPS 300; KT 250; KT 315; KTF 250; KTF 315; KTGF 250; KTGF 315; NH 250; NH 315; NHF 250; NHF 290; NHF 315; NHF 400; UVE 315	**155428** ●	120	45	54,5	21	1/16”x90°	2,2
	155429 ■	150	45	54,5	21	1/16”x90°	2,7
	667208 ■	120	50	80	21	1/16”x90°	3,5
	155430 ●	150	50	80	21	1/16”x90°	4,4
2KTG 400; 2KTG 500; 2KTN 400; 2KTN 500; 3KTG 400; 3KTG 500; 3KTN 400; 3KTN 500; 3QLC 400-126; 3QLK 400-126; 4KTG 400; 4KTG 500; 4KTN 400; 4KTN 500; KG 400; KG 500; KL 400; KL 500; KLNC 400; KLNC 500; KP 400; KP 500; KS 500; KS 630; KSH 500; KSHF 630; KSPS 400; KT 400; KT 500; KT 630; KTF 400; KTF 500; KTGF 400; KTGF 500; KTGF 630; NH 400; NH 500; NH 630; NHF 400; NHF 500; NHF 630; UVE 400; UVE 500; UVE 630; UVE 800	**155431** ■	155	50	80	25,5	1/16”x90°	4,4
	155432 ●	155	68	89	25,5	1/16”x90°	7
	155433 ●	155	68	89	25,5	1/16”x90°	8,7

Soft top jaws, tongue and groove, 120° bevelled

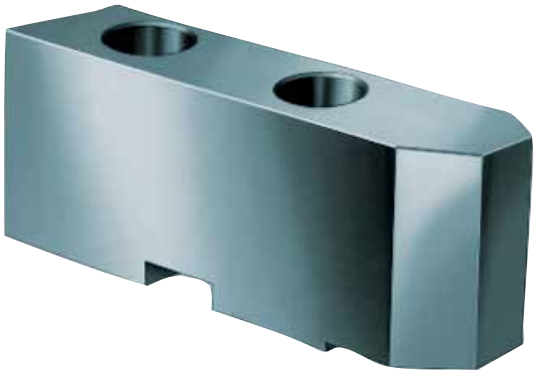

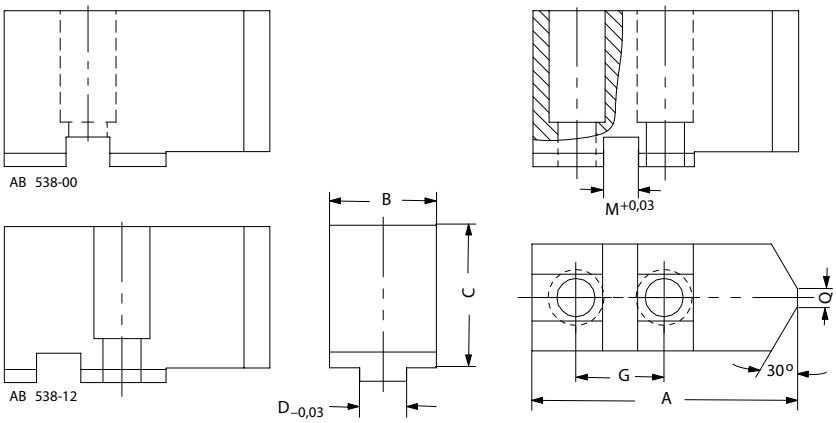

Tool group C 21
Type 549/538 **Soft top jaws, set, can be hardened, tongue and groove 120° bevelled,** material: 16 MnCr 5

Chuck Type	2-jaw set	3-jaw set	Jaw length A	Jaw width B	Jaw height C	D	F	G	M	Q	Weight approx. kg
KG 130; KS 130	**123356** ●	**123355** ●	58	26,5	38	13	31,5	-	8	3	0,31
KG 160; KT 160	**123359** ●	**123358** ●	72,7	36,5	53	10	32,2	25	16	3	0,72
KG 200; KT 200; KTGF 200	**123431** ●	**123430** ●	90,3	36,5	53	12	45,3	30	16	6	1
3KTG 250; 3KTN 250; KG 250; KT 250	**123434** ●	**123433** ●	115,3	45	54,5	20	58,3	40	16	6	1,55
KT 315	**129847** ●	**129849** ●	146	50	80	20	63,5	50	16	6	3,6

Soft top jaws, tongue and groove, for key bar chucks

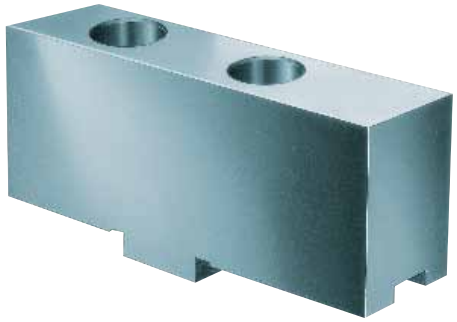

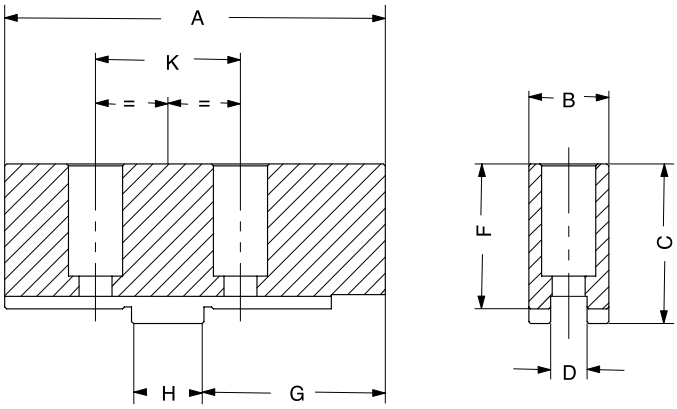

Tool group A28
Type 002 **Unstepped top jaw AB, 3-jaw set, standard design**, soft, material 16MnCr5

Chuck Type	3-jaw set	Jaw length A	Jaw width B	Jaw height C	D	F	G	H	K
F+ 125	**212123** ●	55	20,7	31,3	14	25,5	25	5	20
3FNC 175-42; F+ 160; F 160; KTNC 160; KTNCV 160; KTNCV 175	**094008** ●	85	20,3	41	8	36,5	42	18	32
	137055[1] ●	85	24,4	47	8	42,5	42	18	32
3FNC 200-45; F+ 200; F 200; KTNC 200; KTNCV 200	**094009** ●	105	22	45	10	40	50	20	40
	137056[1] ●	105	34,3	56	10	51	50	20	40
3FNC 250-72; 3FNC 315-82; F+ 250; F 250; KTNC 250; KTNC 280; KTNC 315; KTNCV 250; KTNCV 315; UNC 250; UNC 315	**094010** ●	125	30,4	55	12	50	70	20	40
	137057[1] ●	125	50,5	80	12	75	70	20	40
3FNC 400-92; F+ 315; F 315; KTNC 360; KTNC 400; KTNCV 400; UNC 400	**094011** ●	145	34,3	56	12	50	74	26	54
	137058[1] ●	145	50,5	80	12	74	74	26	54
	618098 ●	145	34,3	80	12	75	74	26	54
3FNC 500-125; 3FNC 630-125; F+ 400; F+ 500; F 400; F 500-L; KTNC 500; KTNC 630; KTNCV 500; KTNCV 630; UNC 500	**094046** ●	180	50,5	80	18	73	100	30	60

1) extended design

Reversible top jaws, hardened, serration 90°

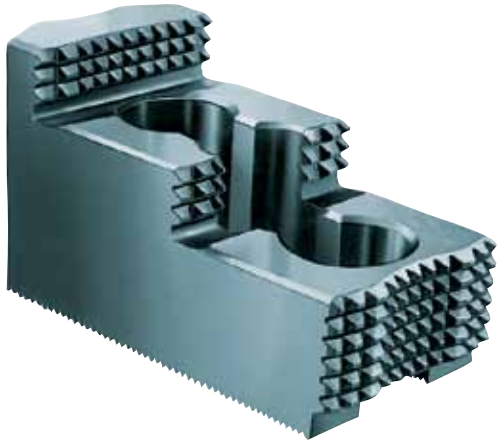

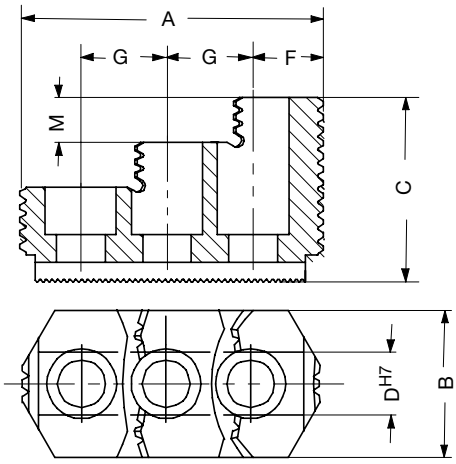

Tool group C 21
Type 543/538 **Reversible top jaws, 3-jaw set, hardened**, **serration 90°** - material: 16 MnCr 5

Chuck Type	2-jaw set	3-jaw set	4-jaw set	Jaw length A	Jaw width B	Jaw height C	D	F	G	M	Serration	Weight approx. kg
3KTG 160; 3KTG 200; 3KTN 160; 3KTN 200; 3QLC 160-38; 3QLC 200-54; 3QLC-KS 200-77; 3QLC-KS 250-101; 3QLK 160-38; 3QLK 200-54; 3QLK-KS 200-77; 3QLK-KS 250-101; AG 160; AG 200; AG 250; KG 200; KGH 160; KGH 175; KGH 200; KGHF 160; KGHF 175; KGHF 200; KL 160; KL 200; KL 250; KLNC 200; KP 200; KS 160; KS 200; KS 250; KSF 175; KSF 200; KSH 160; KSH 200; KSHF 200; KSHF 250; KSPS 160; KSPS 200; KT 160; KT 200; KTF 200; KTGF 200; KTH 160; KTH 175; KTH 200; NH 160; NH 175; NH 200; NHF 160; NHF 175; NHF 200; UVE 160; UVE 200; UVE 250	**046429** ●	**046408** ●	**046456** ●	68	34,7	45	17	17	19	10	1/16”x 90°	0,35
	118521 ●	**118522** ●	**118523** ●	75	36	49	17	21,5	19	12	1/16”x 90°	0,46
	-	**609592** ■	-	80	36	37	17	41	19	12	1/16”x 90°	0,235
	-	**585022** ■	-	81	40	49	17	19	23	12	1/16”x90°	1,5
3KTG 250; 3KTG 315; 3KTN 250; 3KTN 315; 3QLC 250-72; 3QLC 315/88; 3QLC-KS 315-135; 3QLC-KS 400-168; 3QLK 250-72; 3QLK 315/88; 3QLK-KS 315-135; 3QLK-KS 400-168; AG 315; AG 400; KG 250; KG 315; KL 250; KLNC 250; KLNC 315; KS 315; KS 400; KSH 250; KSH 315; KSH 400; KSHF 250; KSHF 315; KSHF 400; KSPS 250; KSPS 300; KT 250; KT 315; KTF 250; KTF 315; KTGF 250; KTGF 315; NH 250; NH 315; NHF 250; NHF 315; NHF 400; UVE 315	**046435** ●	**046414** ●	**046462** ●	103,5	50	58	21	33,5	25	14	1/16”x 90°	1,13
	-	**585533** ■	-	104,5	44,5	54	21	25,5	30	13	1/16”x90°	3,2
3KTG 400; 3KTG 500; 3KTN 400; 3KTN 500; 3QLC 400-126; 3QLK 400-126; KF 400; KF 500; KG 400; KG 500; KL 400; KL 500; KLNC 400; KLNC 500; KP 400; KP 500; KS 500; KS 630; KSH 500; KSHF 630; KSPS 400; KT 400; KT 500; KT 630; KTF 400; KTF 500; KTGF 400; KTGF 500; KTGF 630; NH 400; NH 500; NH 630; NHF 400; NHF 500; NHF 630; UVE 400; UVE 500; UVE 630; UVE 800	**046447** ●	**037531** ●	**046474** ●	135	68	65	25,5	48	31+31	26	3/32”x 90°	2,4

Hardened jaws, supplied as supplement or as spares, must be ground on the chuck.

● from stock ■ within 4 weeks

Reversible top jaws, hardened, tongue and groove

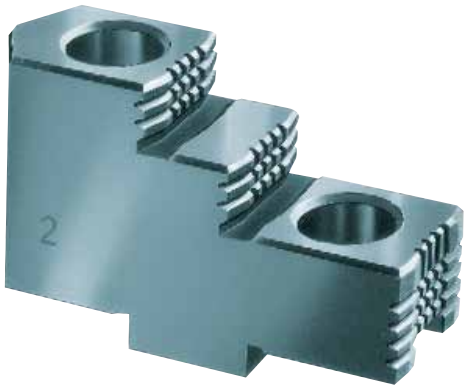

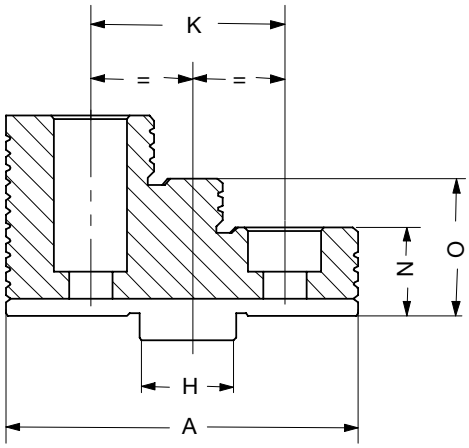

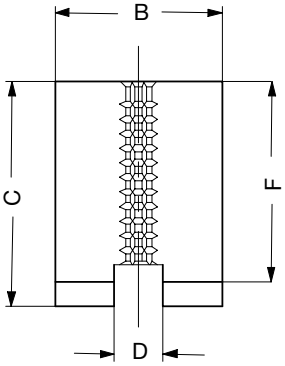

Tool group A 36
Type 530 **Reversible top jaws, 3-jaw set, hardened, tongue and groove**, for **external and internal chucking** - material: 16 MnCr 5

Chuck Type	3-jaw set	Jaw length A	Jaw width B	Jaw height C	D	F	H	K	N	O
3FNC 175-42; F+ 160; F 160; KTNC 160; KTNCV 160; KTNCV 175	**332774** ■	61,5	20,4	37	8	32,7	18	32	17,7	25,2
	137047 ■	62	24,4	40	8	35,7	18	32	17,7	25,7
	094012 ●	61,5	20,4	37	8	32,5	18	32	17,5	25
3FNC 200-45; F+ 200; F 200; KTNC 200; KTNCV 200	**332775** ■	70,5	24,4	42	10	38	20	40	18	28
	137048 ■	126	34,4	46	10	41	20	40	18	28
	094013 ●	70,5	24,4	43	10	38	20	40	18	28
3FNC 250-72; 3FNC 315-82; F+ 250; F 250; KTNC 250; KTNC 280; KTNC 315; KTNCV 250; KTNCV 315; UNC 250; UNC 315	**332776** ■	92	34,4	55	12	50	20	40	22	36
	137049 ■	92	35,7	59	12	54	20	40	22	36
	094014 ●	92	34,4	55	12	50	20	40	22	36
3FNC 400-92; F+ 315; F 315; KTNC 360; KTNC 400; KTNCV 400; UNC 400	**332777** ■	107	37,5	61	12	56	26	54	26	41
	137050 ■	107	50,4	67	12	61	26	54	26	41
	094015 ●	107	35,7	62	12	56	26	54	26	41
3FNC 500-125; 3FNC 630-125; F+ 400; F+ 500; F 400; F 500-L; KTNC 500; KTNC 630; KTNCV 500; KTNCV 630; UNC 500	**332778** ■	130	50,4	79	18	72	30	60	32	52
	094045 ●	130	50,4	79	18	72	30	60	32	52
F+ 630; F 630	**747081** ■	185	68	110	24	102	40	82	42	72
	140715 ●	185	68	110	24	102	40	82	42	72

Stepped and hardened jaws, supplied as supplement or as spares, must be ground on the chuck.

Base jaws GB, hardened, diagonally toothing

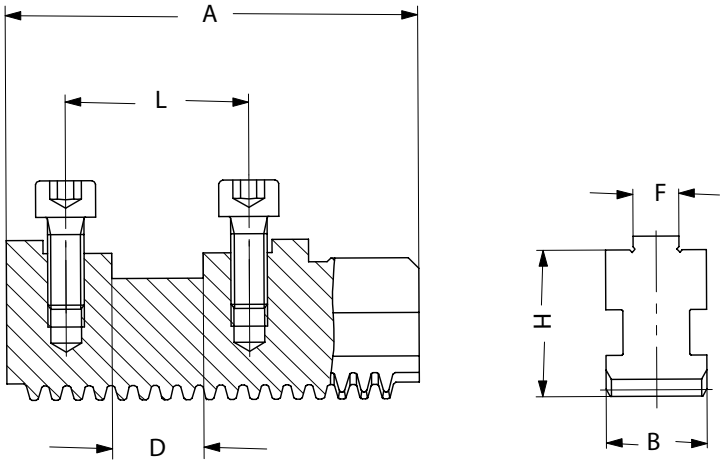

Tool group A28
Type 002 **Base jaw GB, 3-jaw set,** with mounting bolts

Chuck Type	**3-jaw set**	Jaw length A	Jaw width B	D	F	H	L	Weight approx. kg
F+ 125	**212119** ●	47	14	5	-	22	20	0,2
3FNC 175-42; F+ 160; F 160; KTNC 160; KTNCV 160; KTNCV 175	**094004** ●	74	20	18	8	29,5	32	0,265
3FNC 200-45; F+ 200; F 200; KTNC 200; KTNCV 200	**094005** ●	90	22	20	10	35	40	0,365
3FNC 250-72; 3FNC 315-82; F+ 250; F 250; KTNC 250; KTNC 280; KTNC 315; KTNCV 250; KTNCV 315; UNC 250; UNC 315	**094006** ●	110	26	20	12	40	40	0,7
3FNC 400-92; F+ 315; F 315; KTNC 360; KTNC 400; KTNCV 400; UNC 400	**094007** ●	125	32	26	12	46	54	1,065
3FNC 500-125; 3FNC 630-125; F+ 400; F+ 500; F 400; F 500-L; KTNC 500; KTNC 630; KTNCV 500; KTNCV 630; UNC 500	**094044** ●	160	45	30	18	52,7	60	2,35
F+ 630; F 630	**140194** ●	230	65	40	24	62	82	5,665

Soft one-piece jaws BL, diagonally toothing

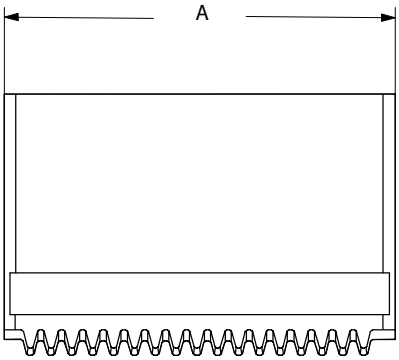

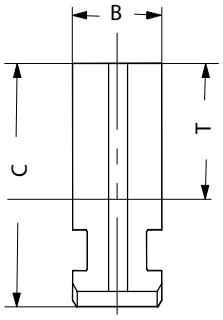

Tool group A28
Type 000 **Unstepped Jaw BL, 3-jaw set,** unstepped, soft, material 16MnCr5

Chuck Type	3-jaw set	Jaw length A	Jaw width B	Jaw height C	T	Weight approx. kg
3FNC 175-42; F+ 160; F 160; KTNC 160; KTNCV 160; KTNCV 175	**332763** ■	84,5	20	45	24	1,41
3FNC 200-45; F+ 200; F 200; KTNC 200; KTNCV 200	**332764** ■	98,4	22	60	35	2,52
	162560 ■	98,4	22	80	55	3,5
	643088 ■	98,4	22	90	65	4
	321444 ■	98,4	22	95	70	4,2
	249678 ●	98,4	22	60	35	0,9
3FNC 250-72; 3FNC 315-82; F+ 250; KTNC 250; KTNC 280; KTNC 315; KTNCV 250; KTNCV 315; UNC 250; UNC 315	**332765** ■	118,7	26	70	41	4,23
3FNC 250-72; 3FNC 315-82; 3FNC 500-125; F+ 250; KTNC 250; KTNC 280; KTNC 315; KTNCV 250; KTNCV 315; UNC 250; UNC 315; UNC 500	**810394** ■	118,7	26	80	51	5
3FNC 250-72; 3FNC 315-82; F+ 250; KTNC 250; KTNC 280; KTNC 315; KTNCV 250; KTNCV 315; UNC 250; UNC 315	**162561** ■	118,7	26	90	61	5,7
	810396 ■	118,7	26	100	71	6,4
	616002 ■	70	26	100	71	3,5
	616000 ■	115	26	130	101	8,5
	695681 ■	180	26	140	111	14,3
	249679 ●	118,7	26	70	41	1,535
3FNC 400-92; F+ 315; F 315; KTNC 360; KTNC 400; KTNCV 400; UNC 400	**332766** ■	136,6	32	79	44,5	7,3
	249680 ●	136,6	32	79	44,5	2,4
3FNC 500-125; 3FNC 630-125; F+ 400; F+ 500; F 400; F 500-L; KTNC 500; KTNC 630; KTNCV 500; KTNCV 630; UNC 500	**332767** ■	173,6	45	93	54	15,7
	249681 ●	173,6	45	93	54	5

One-piece reversible jaws EB, hardened, diagonally toothing

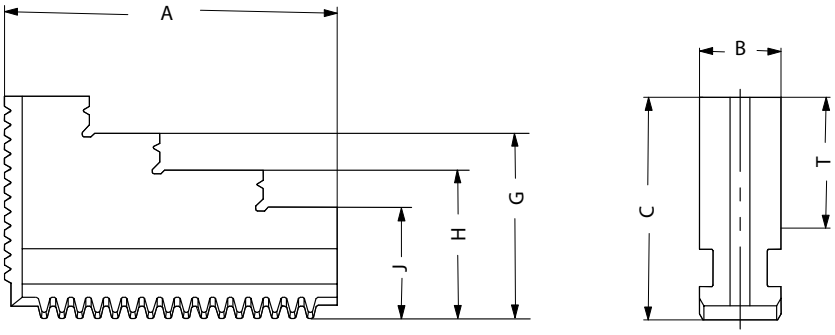

Tool group A28
Type 000 **One-piece jaw EB, 3-jaw set,** hardened

Chuck Type	3-jaw set	Jaw length A	Jaw width B	Jaw height C	G	H	J	T	Weight approx. kg
3FNC 175-42; F+ 160; F 160; KTNC 160; KTNCV 160; KTNCV 175	**332757** ■	77,7	20	45	37,5	30	22,5	24	1,1
	094000 ●	77,7	20	45	37,5	30	22,5	24	0,5
3FNC 200-45; F+ 200; F 200; KTNC 200; KTNCV 200	**332758** ■	94,7	22	60	50	40	30	35	1,9
	094001 ●	94,7	22	60	50	40	30	35	0,635
3FNC 250-72; 3FNC 315-82; F+ 250; F 250; KTNC 250; KTNC 280; KTNC 315; KTNCV 250; KTNCV 315; UNC 250; UNC 315	**332759** ■	114	26	70	56	-	42	41	3,3
	094002 ●	114	26	70	56	-	42	41	1,135
3FNC 400-92; F+ 315; F 400; KTNC 360; KTNC 400; KTNCV 400; UNC 400	**332760** ■	130	32	79	64	-	49	44,5	5,3
	094003 ●	130	32	79	64	-	49	44,5	1,835
3FNC 500-125; 3FNC 630-125; F+ 400; F+ 500; F 400; F 500-L; KTNC 500; KTNC 630; KTNCV 500; KTNCV 630; UNC 500	**332761** ■	167	45	93	73	-	53	54	10,8
	094043 ●	167	45	93	73	-	53	54	3,665

Stepped and hardened jaws, supplied as supplement or as spares, must be ground on the chuck.
In case of a subsequent jaw delivery please send us the chuck.

Draw-down jaws NB, diagonally toothing

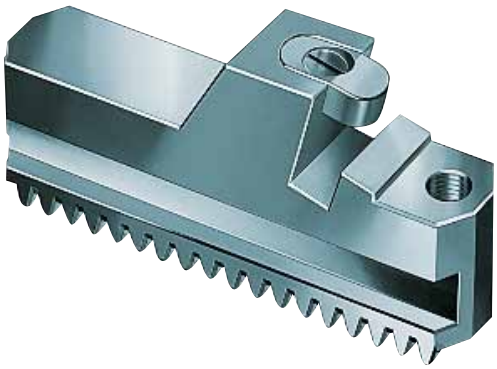

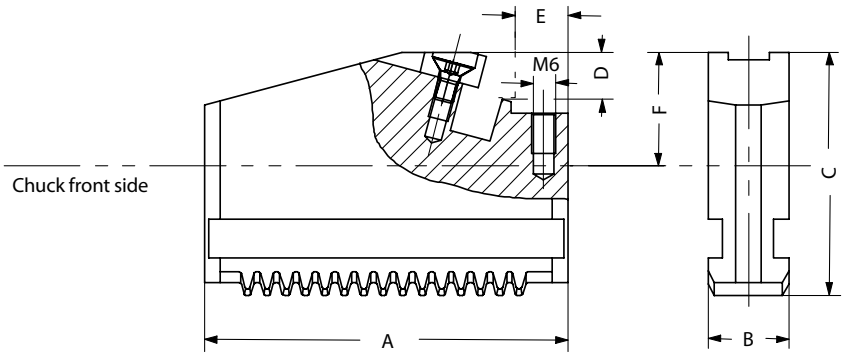

Tool group C 21
Type 545-00 **Draw-down jaws, 1 piece,** without interchangeable clamping inserts, **diagonally toothing**

Chuck Type	Item no.	Jaw length A	Jaw width B	Jaw height C	D	E	F	Thread
3FNC 175-42; F 160; KTNC 160; KTNCV 175	**141037** ●	84,4	20	43,5	15	11	22,5	M6
	141038 ●	84,4	20	43,5	15	32	22,5	M6
3FNC 200-45; F 200; KTNC 200; KTNCV 200	**141039** ●	98,4	22	47,5	15	12	22,5	M6
	141040 ●	98,4	22	47,5	15	48	22,5	M6
3FNC 250-72; F 250; KTNC 250; KTNC 280; KTNCV 250; UNC 250	**141041** ●	118,7	26	58,5	20	12	29,5	M6
	141042 ●	118,7	26	58,5	20	58	29,5	M6
3FNC 315-82; 3FNC 400-92; F 315; KTNC 315; KTNC 360; KTNC 400; KTNCV 315; KTNCV 400; UNC 315; UNC 400	**141043** ●	136,4	32	63,9	20	12	29,5	M6
	141044 ●	136,4	32	63,9	20	72	29,5	M6
3FNC 500-125; 3FNC 630-125; F 400; F 500-L; KTNC 500; KTNC 630; KTNCV 500; KTNCV 630; UNC 500	**141045** ●	173,6	45	73,4	25	12	34,3	M6
F 400	**141046** ●	173,6	45	73,4	25	77	34,3	M6
3FNC 500-125; 3FNC 630-125; F 500-L; KTNC 500; KTNC 630; KTNCV 500; KTNCV 630; UNC 500	**141048** ●	173,6	45	73,4	25	110	34,3	M6

Interchangeable clamping inserts

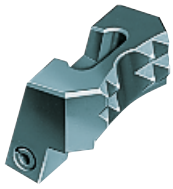

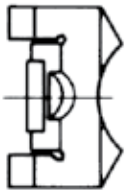

Tool group C 15
Type 545-60 **Interchangeable clamping inserts**, 1 piece, **with claws**

Item no.	Size	Design	Contents of delivery
151029 ●	**140**	with claws	piece
141049 ●	**160/200**	with claws	piece
141052 ●	**250/315**	with claws	piece
141055 ●	**400/500**	with claws	piece

Interchangeable clamping inserts

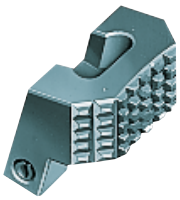

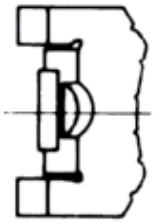

Tool group C 15
Type 545-70 **Interchangeable clamping inserts**, 1 piece, **with serrated toothing**

Item no.	Size	Design	Contents of delivery
151039 ●	**140**	serrated toothing	piece
141050 ●	**160/200**	serrated toothing	piece
141053 ●	**250/315**	serrated toothing	piece
141056 ●	**400/500**	serrated toothing	piece

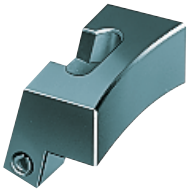

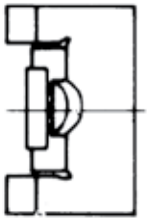

Tool group C 15
Type 545-80 **Interchangeable clamping inserts**, 1 piece, **with heat treatable surface**

Item no.	Size	Design	Contents of delivery
151040 ●	**140**	with heat treatable surface	piece
141051 ●	**160/200**	with heat treatable surface	piece
141054 ●	**250/315**	with heat treatable surface	piece
141057 ●	**400/500**	with heat treatable surface	piece

Tool group C 15
Type 544-00 **Interchangeable workpiece rests**, 1 piece, **in different lengths**

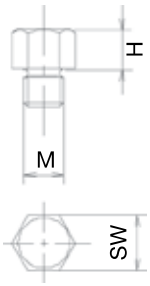

Item no.	Size	M	H	SW
289188 ●	**2**	M6	5	9
138950 ●	**2**	M6	10	9
725581 ●	**2**	M6	15	9

Claw-type jaws, hardened, serration 90°, groove 17 - 25,5

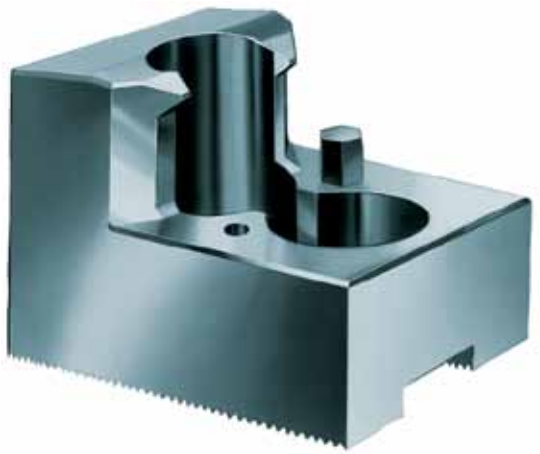

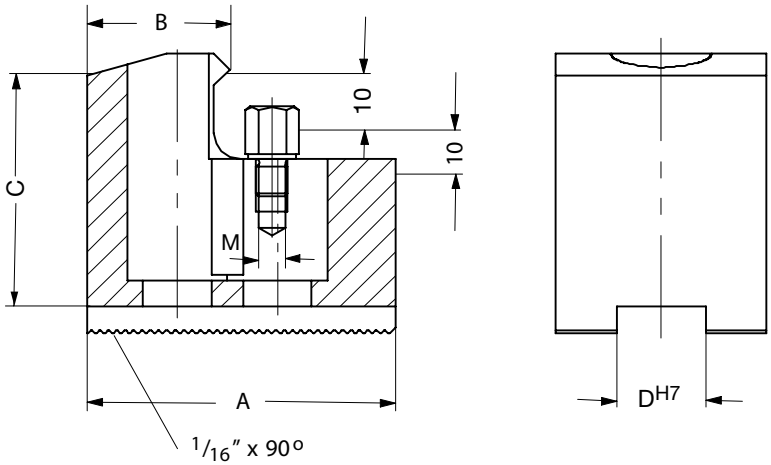

Tool group C 21
Type 544-50 **Claw-type jaws, 1 piece, hardened, serration 90°** - width of the groove **17 - 25,5**

Chuck Type	Item no.	Jaw length A	B	Jaw height C	D	Thread
3KTG 160; 3QLC 160-38; 3QLC 200-54; 3QLC-KS 200-77; 3QLK 200-54; 3QLK-KS 200-77; AG 160; KGH 160; KGH 175; KGHF 160; KGHF 175; KL 160; KS 160; KSF 175; KSH 160; KT 160; KTH 175; NH 160; NH 200; NHF 160	**137031** ●	**67**	53	45	17	M6
3KTG 160; 3QLC 160-38; 3QLC 200-54; 3QLC-KS 200-77; 3QLK 200-54; 3QLK-KS 200-77; AG 160; AG 200; AG 250; KG 200; KGH 160; KGH 175; KGH 200; KGHF 160; KGHF 175; KGHF 200; KL 160; KL 200; KLNC 200; KS 160; KS 200; KS 250; KSF 175; KSH 160; KSH 200; KSHF 200; KT 160; KT 200; KTF 200; KTH 175; KTH 200; KTH 250; KTH 315; NH 160; NH 200; NHF 160; NHF 200; NHF 290; UVE 250	**137032** ●	**65**	46	45	17	M6
	137033 ●	**55**	39	45	17	M6
	137034 ●	**50**	31	45	17	M6
	137035 ●	**55**	27	45	17	M6
	137036 ●	**65**	19	45	17	M6
	137037 ●	**65**	26	45	17	M6
	137038 ●	**55**	24	45	17	M6
	137039 ●	**55**	40	45	17	M6
2KTN 250; 3KTN 250; 3QLC 315/88; 3QLK 315/88; 4KTN 250; AG 315; AG 400; KG 250; KG 315; KL 250; KLNC 250; KLNC 315; KS 315; KS 400; KSH 250; KSH 315; KSH 400; KSHF 250; KSHF 315; KSHF 400; KT 250; KT 315; KTF 250; KTF 315; KTGF 250; NH 250; NH 315; NHF 250; NHF 290; NHF 315; NHF 400; UVE 315	**137041** ●	**95**	80	50	21	M6
	137042 ●	**75**	60	50	21	M6
	137043 ●	**60**	43	50	21	M6
	137044 ●	**70**	37	50	21	M6
	137045 ●	**95**	25	50	21	M6
	137046 ●	**80**	30	50	21	M6
3QLC 400-126; 3QLK 400-126; KF 500; KG 400; KG 500; KL 400; KL 500; KLNC 400; KLNC 500; KS 500; KSH 500; KT 400; KT 500; KT 630; KTF 400; KTF 500; KTGF 400; KTGF 630; NH 400; NH 500; NH 630; NHF 400; NHF 500; NHF 630; UVE 400; UVE 500; UVE 630	**137051** ●	**130**	113	65	25,5	M6
	137052 ●	**90**	67	65	25,5	M6
	137053 ●	**100**	45	65	25,5	M6
	137054 ●	**130**	33	65	25,5	M6

Tool group C 15
Type 544-00 **Interchangeable workpiece rests**, 1 piece, **in different lengths**

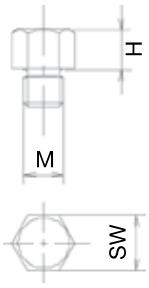

Item no.	Size	M	H	SW
147263 ●	**1**	M5	5	7
139177 ●	**1**	M5	8	7
298191 ●	**1**	M5	10	7
289188 ●	**2**	M6	5	9
138950 ●	**2**	M6	10	9
725581 ●	**2**	M6	15	9

Claw-type jaws, hardened, tongue and groove

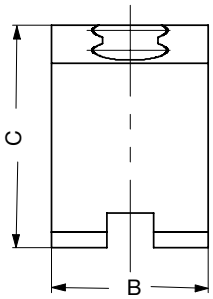

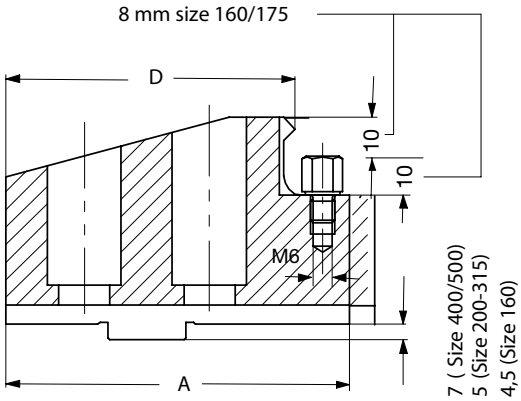

Tool group C 21
Type 544-00 **Reversible claw-type top jaws**, tongue and groove, 1 piece hardened

Chuck Type	Item no.	Jaw length A	Jaw width B	Jaw height C	D
3FNC 175-42; F+ 160; F 160; KTNC 160; KTNCV 175	**137060** ●	**66**	24	37,5	17
	137061 ●	**66**	20	37,5	61
	137062 ●	**56**	20	37,5	29
3FNC 200-45; F+ 200; F 200; KTNC 200; KTNCV 200	**137064** ●	**81**	24	43	71
	137065 ●	**66**	24	43	38,5
	137066 ●	**79**	34	43	29,5
	137067 ●	**81**	34	43	71
	137068 ●	**66**	34	43	38,5
3FNC 250-72; 3FNC 315-82; F+ 250; F 250; KTNC 250; KTNC 280; KTNC 315; KTNCV 250; KTNCV 315; UNC 250; UNC 315	**137108** ●	**90**	34	55	78
	137109 ●	**72**	34	55	38
	137110 ●	**80**	50	55	29
	137111 ●	**90**	50	55	78
	137112 ●	**72**	50	55	38
3FNC 400-92; 3FNC 500-125; 3FNC 630-125; F 315; F 400; F 500-L; KTNC 360; KTNC 400; KTNC 500; KTNC 630; KTNCV 400; KTNCV 500; KTNCV 630; UNC 400; UNC 500	**137114** ●	**100**	34	62	90
	137115 ●	**86**	34	62	42
	137116 ●	**93**	50	62	30
	137117 ●	**106**	50	62	90
	137118 ●	**86**	50	62	42
F+ 400; F+ 500	**137119** ●	**124**	50	62	39
	137120 ●	**124**	50	62	112
	137121 ●	**100**	50	62	48

Tool group C 15
Type 544-00 **Interchangeable workpiece rests**, 1 piece, **in different lengths**

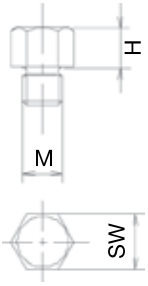

Item no.	Size	M	H	SW
289188 ●	**2**	M6	5	9
138950 ●	**2**	M6	10	9
725581 ●	**2**	M6	15	9

Soft segment top jaws, serration 90°

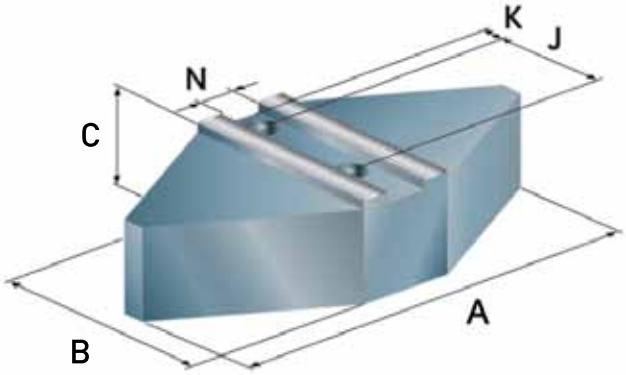

Design I

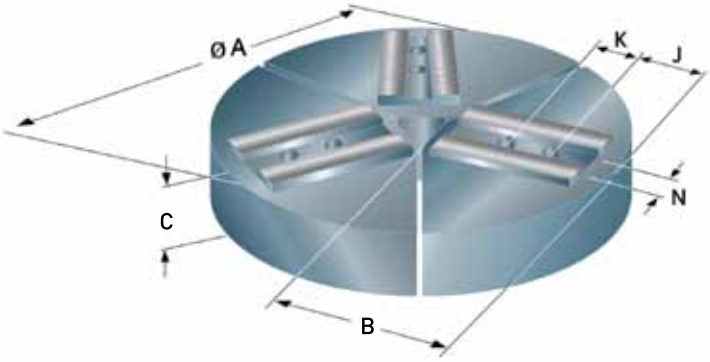

Design II

Tool group C 21
Type 9052 **Segment top jaws, 3 jaw set, can be hardened, serration $^{1}/_{16}$"x90°** - material: C15

Chuck Type	3-jaw set	A	B	C	N	K	J	Material	Design	Weight approx. kg
3KTG 160; 3KTN 160; 3QLC 160-38; 3QLC-LS 160-30; 3QLK 160-38; KGH 160; KGH 175; KGHF 160; KGHF 175; KL 160; KS 160; KSF 175; KSH 160; KSPS 160; KTH 160; KTH 175; NH 160; NH 175; NHF 160; NHF 175; UVE 160	**1032909** ■	120	60	60	17	15	22	steel	Design I	9
	1032910 ■	120	64	64	17	15	22	aluminium	Design I	3,2
	1032911 ■	169	76	76	17	21,5	22	steel	Design II	13
	1032912 ■	169	76	76	17	21,5	22	aluminium	Design II	4
3KTG 200; 3KTN 200; 3QLC 200-54; 3QLC-KS 200-77; 3QLC-LS 200-41; 3QLK 200-54; 3QLK-KS 200-77; KG 200; KGH 200; KGHF 200; KLNC 200; KP 200; KS 200; KSF 200; KSH 200; KSHF 200; KSPS 200; KT 200; KTGF 200; KTH 200; NH 200; NHF 200; QLC-AG 200; UVE 200	**1032913** ■	150	64	76	17	15	22	steel	Design I	14
	1032914 ■	150	64	76	17	15	22	aluminium	Design I	5
3KTG 200; 3KTN 200; 3QLC 200-54; 3QLC-KS 200-77; 3QLC-KS 250-101; 3QLC-LS 200-41; 3QLK 200-54; 3QLK-KS 200-77; 3QLK-KS 250-101; KG 200; KGH 200; KGHF 200; KL 250; KLNC 200; KP 200; KS 200; KS 250; KSF 200; KSH 200; KSHF 200; KSHF 250; KSPS 200; KT 200; KTGF 200; KTH 200; NH 200; NHF 200; NHF 250; NHF 290; QLC-AG 200; UVE 200; UVE 250	**1032915** ■	210	76	95	17	25	22	steel	Design II	21
	1032916 ■	210	76	95	17	25	22	aluminium	Design II	7
3QLC-KS 250-101; 3QLK-KS 250-101; KL 250; KS 250; KSHF 250; NHF 250; NHF 290; UVE 250	**1032917** ■	170	64	89	17	20	22	steel	Design I	20
	1032918 ■	170	64	89	17	20	22	aluminium	Design I	7

www.jawfinder.biz

- **Quickly and simply to the right clamping jaw!**
- **Only three steps to the right clamping jaw**
- **Find the right jaw also for all common manufacturers**
- **Choose from a broad range of jaws**
- **convenient enquiry function**

Bison

Soft top jaws, serration 90° 116
Soft top jaws, without mounting holes, serration 90° 117
Soft top jaws, serration 60° 118
Soft top jaws, tongue and groove, 120° bevelled 119
Reversible top jaws, hardened, serration 90° 120
Reversible top jaws, hardened, serration 60° 121
Claw-type jaws, hardened, serration 90° 122
Claw-type jaws, hardened, serration 60° 123

Errors and corrections are reserved!

Soft top jaws, serration 90°

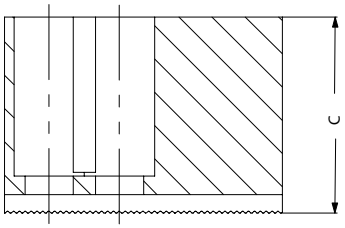

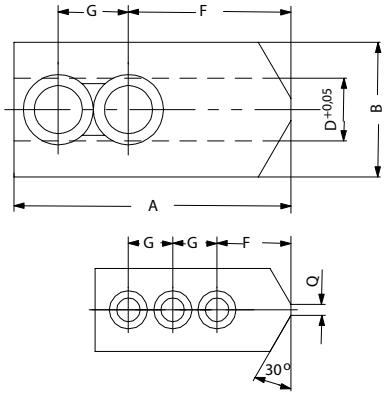

Tool group C 21
Type 543/538 **Soft top jaws, set, can be hardened, serration 90°** - material: 16 MnCr 5

Chuck Type	2-jaw set	3-jaw set	4-jaw set	Jaw length A	Jaw width B	Jaw height C	D	F	G	Q	Serration	Weight approx. kg
2409-130-32	**045794** ●	**046402** ●	**046450** ●	53	22,5	30	10	20	12	3	1/16”x 90°	0,223
2405-160-45; 2409-200-66; 2488-200	**133147** ●	**133152** ●	**133157** ●	66,7	36,5	53	17	36	19	-	1/16”x 90°	0,7
2405-200-52; 2409-250-91; 2409-315-91; 2488-200	**133148** ●	**133153** ●	**133158** ●	75	36,5	53	17	44	19	-	1/16”x 90°	0,88
	-	**461712** ●	-	75	36,5	65	17	44	19	-	1/16”x90°	3,4
	-	**585021** ■	-	90	36,5	40	17	47	23	5	1/16”x90°	2,7
	-	**894365** ●	-	90	40	60	17	43	22	5	1/16”x90°	4,2
	-	**894357** ■	-	98	35	40	17	61	22	-	1/16”x90°	2,9
2405-250-75; 2405-315-91	**133149** ●	**133154** ●	**133159** ●	95	45	54,5	21	55	25	-	1/16”x 90°	1,4
	-	**585531** ●	-	110	50	55,5	21	60	30	-	1/16”x90°	6,3
2405-315-91	**133150** ●	**133155** ●	**133160** ●	103	50	80	21	62	25	-	1/16”x 90°	2,58
	-	**894366** ●	-	120	50	80	21	62	28	-	1/16”x90°	8,9
2405-500-160; 2405-630-165; 2405-800-255; 2500-400-140; 2500-630-275-SPR; 2501-400-140 ZW; 2501-570-230	**133151** ●	**133156** ●	**133161** ●	130	50	80	25,5	79	31	-	3/32”x 90°	3,1
	-	**118004** ■	-	130	50	80	25,5	20	35	-	3/32”x90°	3,1

● from stock ■ within 4 weeks

Soft top jaws, without mounting holes, serration 90°

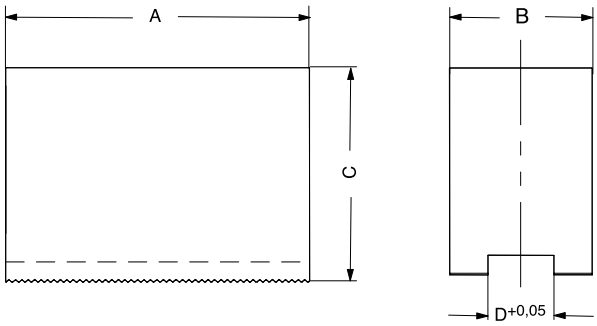

Tool group C 21
Type 543-28 **Soft top jaws, piece, without mounting holes, can be hardened, serration 90°** - material: 16 MnCr 5

Chuck Type	Item no.	Jaw length A	Jaw width B	Jaw height C	D	Serration	Weight approx. kg
2409-130-32	**883005** ●	52	26,5	38	10	1/16"x90°	0,4
2409-160-46	**631327** ●	55	26,5	38	12	1/16"x90°	0,4
2105-160-45; 2405-160-45; 2409-200-66; 2488-200; 2605-160-45	**667392** ■	90	36,5	53	17	1/16"x90°	1,3
2105-160-45; 2105-200-52; 2405-160-45; 2405-200-52; 2409-200-66; 2409-250-91; 2409-315-91; 2488-200; 2605-160-45; 2605-200-52	**155423** ■	105	36,5	53	17	1/16"x90°	1,5
	681620 ■	120	36,5	53	17	1/16"x90°	1,7
2105-160-45; 2405-160-45; 2409-200-66; 2488-200; 2605-160-45	**155424**	90	45	54,5	17	1/16"x90°	1,7
2105-160-45; 2105-200-52; 2405-160-45; 2405-200-52; 2409-200-66; 2409-250-91; 2409-315-91; 2488-200; 2605-160-45; 2605-200-52	**155425** ●	105	45	54,5	17	1/16"x90°	2
2105-200-52; 2405-200-52; 2409-250-91; 2409-315-91; 2488-200; 2605-200-52	**155426** ■	120	45	54,5	17	1/16"x90°	2,2
	155427 ●	90	50	80	17	1/16"x90°	2,6
2105-250-75; 2105-315-91; 2405-250-75; 2405-315-91; 2488-315; 2605-250-75; 2605-315-91	**155428** ●	120	45	54,5	21	1/16"x90°	2,2
	155429 ■	150	45	54,5	21	1/16"x90°	2,7
	667208 ■	120	50	80	21	1/16"x90°	3,5
	155430 ●	150	50	80	21	1/16"x90°	4,4
2405-500-160; 2405-630-165; 2405-800-255; 2500-400-140; 2500-630-275-SPR; 2501-400-140 ZW; 2501-570-230	**155431** ■	155	50	80	25,5	1/16"x90°	4,4
	155432 ●	155	68	89	25,5	1/16"x90°	7
	155433 ●	155	68	89	25,5	1/16"x90°	8,7

Soft top jaws, serration 60°

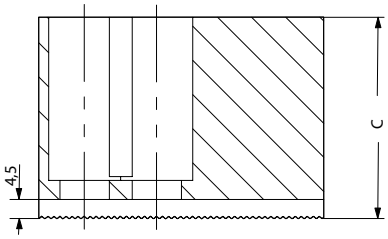

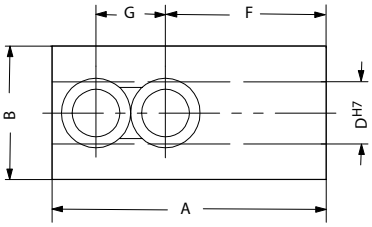

Tool group C 21
Type 543-32 **Soft top jaws, 3-jaw set, can be hardened, serration 60°** - material: 16 MnCr 5

Chuck Type	**3-jaw set**	Jaw length A	Jaw width B	Jaw height C	D	F	G	Serration	Weight approx. kg
2405-135-34K	**154863** ●	54	23	29	10	28	14	1,5 x 60°	0,25
2405-160-45K	**154865** ●	72	30,5	43	12	37	20	1,5 x 60°	0,5
2405-200-52K	**154867** ●	95	35	45,5	14	46	25	1,5 x 60°	0,9
2405-250-75K	**154869** ●	110	50	45	16	50	30	1,5 x 60°	1,7
2405-315-91K	**154871** ●	130	50	55,5	21	52	30	1,5 x 60°	1,9

Soft top jaws, tongue and groove, 120° bevelled

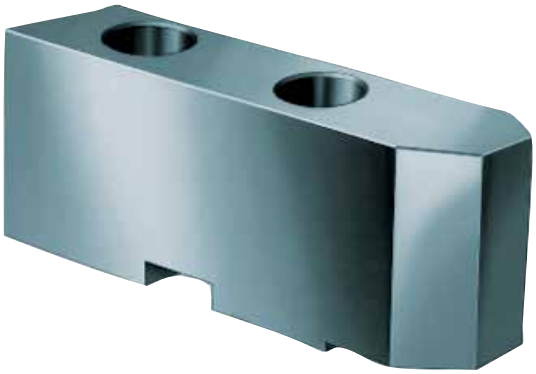

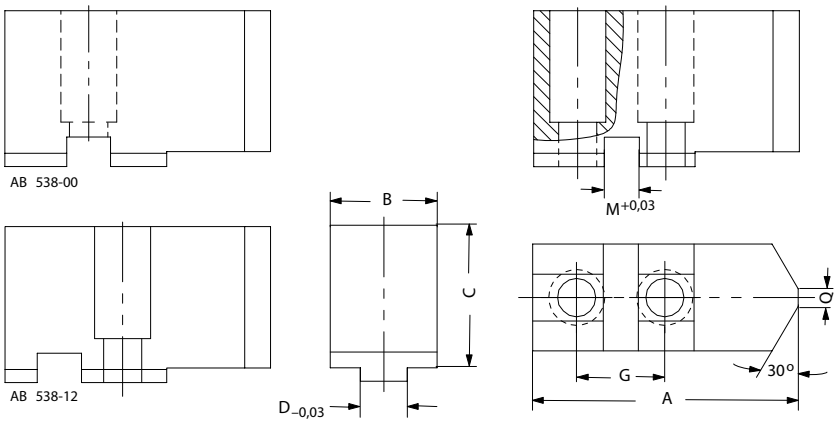

Tool group C 21
Type 549/538 **Soft top jaws, set, can be hardened, tongue and groove 120° bevelled,** material: 16 MnCr 5

Chuck Type	2-jaw set	3-jaw set	Jaw length A	Jaw width B	Jaw height C	D	F	G	M	Q	Weight approx. kg
2406-160	**123359** ●	**123358** ●	72,7	36,5	53	10	32,2	25	16	3	0,72
2406-190; 2406-225	**123431** ●	**123430** ●	90,3	36,5	53	12	45,3	30	16	6	1

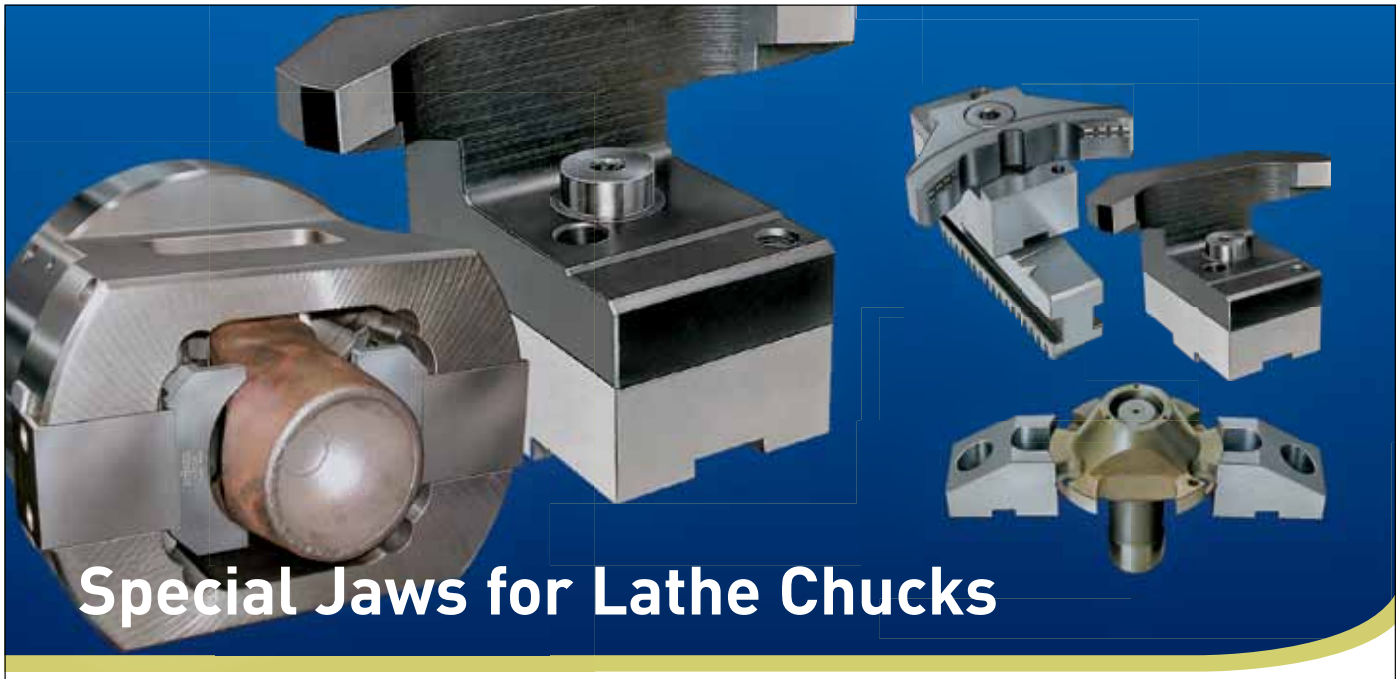

High flexibility and
individual clamping options

With our own construction department and production we are the perfect partner concerning gripping solutions and clamping problems.
For designing the various styles and forms we rely on our experience of more than 100 years.

Drill Chucks
Live Centers
→ Lathe Chucks
Vices
Automation Technology
Power Chuck Technology
Mandrels
Tool Clamping Systems
Special Design

www.roehm.biz

driven by technology

Reversible top jaws, hardened, serration 90°

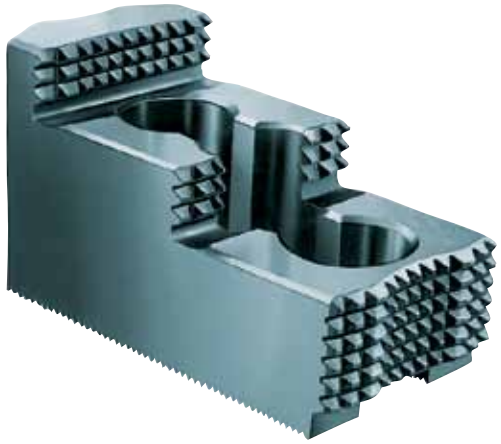

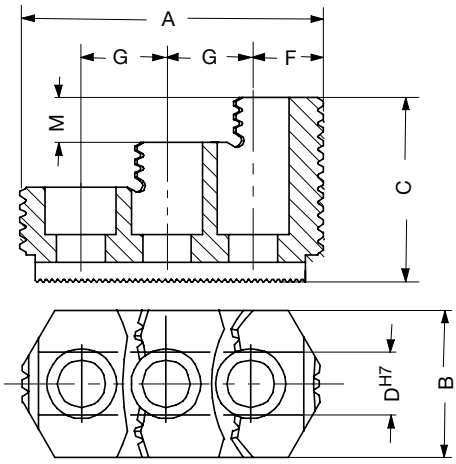

Tool group C 21
Type 543/538 **Reversible top jaws, set, hardened, serration 90°** - material: 16 MnCr 5

Chuck Type	2-jaw set	3-jaw set	4-jaw set	Jaw length A	Jaw width B	Jaw height C	D	F	G	M	Serration	Weight approx. kg
2409-130-32	**046545** ●	**046544** ●	**046546** ●	56	26	37,5	10	10	12	10	1/16"x 90°	0,13
2405-160-45; 2405-200-52; 2409-200-66; 2409-250-91; 2409-315-91; 2488-200	**046429** ●	**046408** ●	**046456** ●	68	34,7	45	17	17	19	10	1/16"x 90°	0,35
	118521 ●	**118522** ●	**118523** ●	75	36	49	17	21,5	19	12	1/16"x 90°	0,46
	-	**609592** ■	-	80	36	37	17	41	19	12	1/16"x 90°	0,235
	-	**585022** ■	-	81	40	49	17	19	23	12	1/16"x90°	1,5
2405-250-75; 2405-315-91; 2488-315	**046435** ●	**046414** ●	**046462** ●	103,5	50	58	21	33,5	25	14	1/16"x 90°	1,13
	-	**585533** ■	-	104,5	44,5	54	21	25,5	30	13	1/16"x90°	3,2
2405-500-160; 2405-630-165; 2405-800-255; 2500-400-140; 2500-630-275-SPR; 2501-400-140 ZW; 2501-570-230	**046447** ●	**037531** ●	**046474** ●	135	68	65	25,5	48	31+31	26	3/32"x 90°	2,4

Hardened jaws, supplied as supplement or as spares, must be ground on the chuck.

Reversible top jaws, hardened, serration 60°

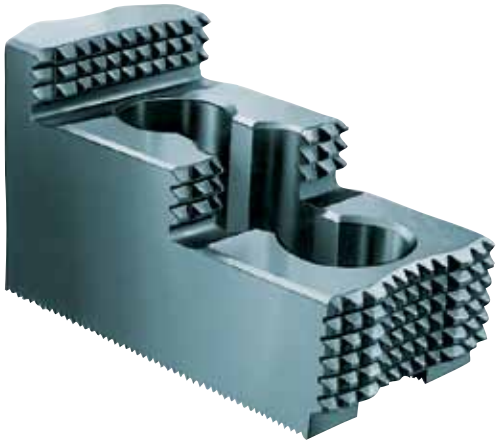

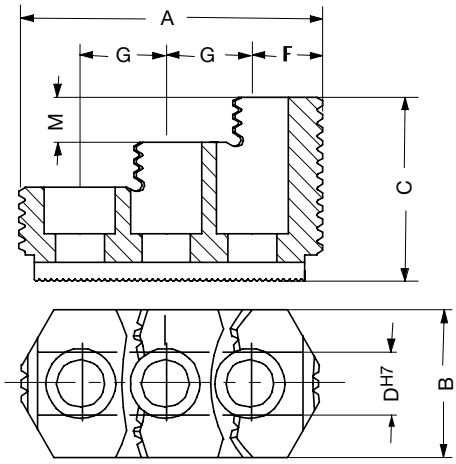

Tool group C 21
Type 543-31**Reversible top jaws, 3-jaw set, hardened**, **serration 60°** - material: 16 MnCr 5

Chuck Type	**3-jaw set**	Jaw length A	Jaw width B	Jaw height C	D	F	G	M	Serration	Weight approx. kg
2405-135-34K	**154814**[1] ●	54	23	27,5	10	13	14	10	1,5 x 60°	0,16
2405-160-45K	**154674**[1] ●	66	34,7	36	12	12,5	20	12	1,5 x 60°	0,3
2405-200-52K	**154676** ●	81	36	49	14	17,5	25	12	1,5 x 60°	0,6
2405-250-75K	**154678** ●	99,5	44,5	54	16	25,5	30	13	1,5 x 60°	1,2
2405-315-91K	**154816**[1] ●	103	50	55,5	21	22,5	30	17	1,5 x 60°	1,5

[1] one step only
Hardened jaws, supplied as supplement or as spares, must be ground on the chuck.

Claw-type jaws, hardened, serration 90°

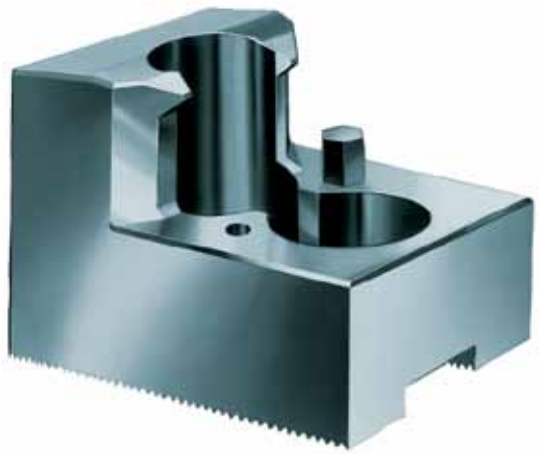

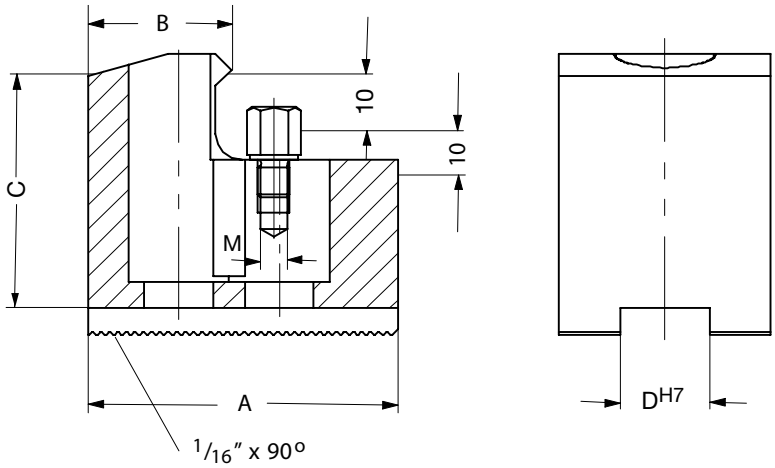

Tool group C 21
Type 544-50 **Claw-type jaws, 1 piece, hardened, serration 90°** - width of the groove **10 - 25,5**

Chuck Type	Item no.	Jaw length A	B	Jaw height C	D	Thread
2409-130-32	147259 ■	50	41	27	10	M5
	147261 ■	44	22	27	10	M5
2105-160-45; 2105-200-52; 2405-160-45; 2405-200-52; 2409-200-66; 2409-250-91; 2409-315-91; 2605-160-45; 2605-200-52	137031 ●	67	53	45	17	M6
	137032 ●	65	46	45	17	M6
	137033 ●	55	39	45	17	M6
	137034 ●	50	31	45	17	M6
	137035 ●	55	27	45	17	M6
	137036 ●	65	19	45	17	M6
	137037 ●	65	26	45	17	M6
	137038 ●	55	24	45	17	M6
	137039 ●	55	40	45	17	M6
2105-250-75; 2105-315-91; 2405-250-75; 2405-315-91; 2605-250-75; 2605-315-91	137041 ●	95	80	50	21	M6
	137042 ●	75	60	50	21	M6
	137043 ●	60	43	50	21	M6
	137044 ●	70	37	50	21	M6
	137045 ●	95	25	50	21	M6
	137046 ●	80	30	50	21	M6
2405-500-160; 2405-630-165; 2405-800-255; 2500-400-140; 2500-630-275-SPR; 2501-400-140 ZW; 2501-570-230	137051 ●	130	113	65	25,5	M6
	137052 ●	90	67	65	25,5	M6
	137053 ●	100	45	65	25,5	M6
	137054 ●	130	33	65	25,5	M6

Tool group C 15
Type 544-00 **Interchangeable workpiece rests**, 1 piece, **in different lengths**

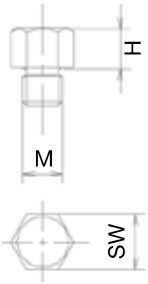

Item no.	Size	M	H	SW
147263 ●	1	M5	5	7
139177 ●	1	M5	8	7
298191 ●	1	M5	10	7
289188 ●	2	M6	5	9
138950 ●	2	M6	10	9
725581 ●	2	M6	15	9

● from stock ■ within 4 weeks

Claw-type jaws, hardened, serration 60°

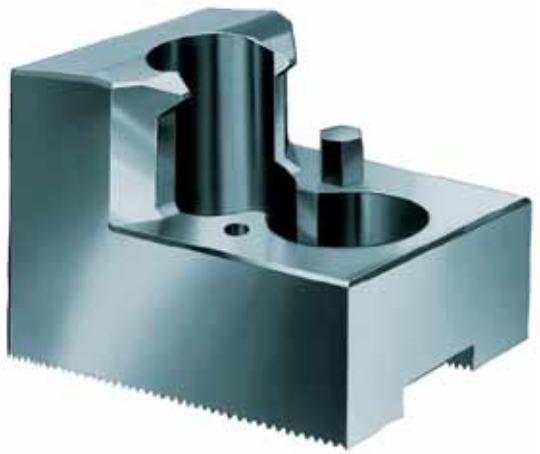

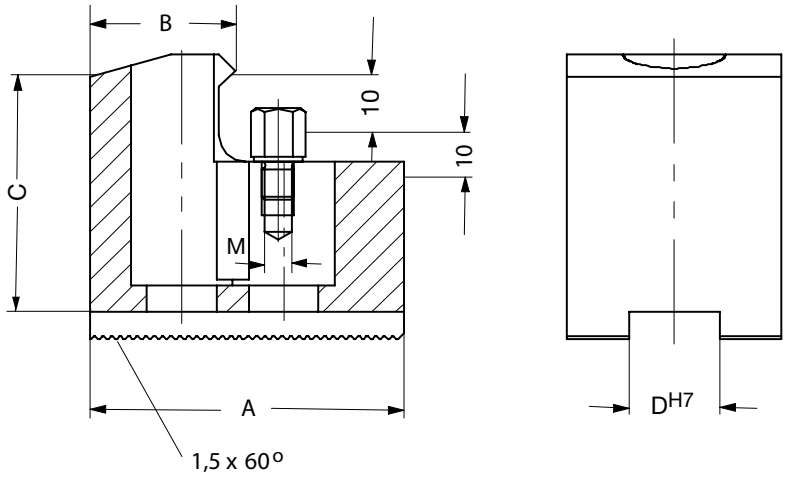

Tool group C 21
Type 543-33 **Claw-type jaws**, 1 piece, **hardened**, **serration 60°** - width of the groove **12**

Chuck Type	Item no.	Jaw length A	B	Jaw height C	D	Thread
2105-135-34K; 2405-160-45K; 2605-160-45K	**156025** ■	**67**	53	45	12	M6
	156027 ■	**65**	46	45	12	M6
	156029 ■	**55**	40	45	12	M6
	161189 ■	**55**	24	45	12	M6
2105-250-75K; 2405-250-75K; 2605-250-75K	**156099** ●	**95**	80	50	16	M6
	156101 ●	**75**	60	50	16	M6
	156103 ●	**60**	43	50	16	M6
	156105 ●	**70**	37	50	16	M6

Tool group C 15
Type 544-00 **Interchangeable workpiece rests**, 1 piece, **in different lengths**

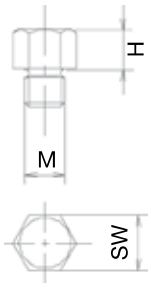

Item no.	Size	M	H	SW
289188 ●	**2**	M6	5	9
138950 ●	**2**	M6	10	9
725581 ●	**2**	M6	15	9

In this jaw-catalogue RÖHM presents a comprehensive clamping jaw program. A big number of jaw types offer nearly all possibilities of clamping in lathe chucks, independent chucks and power chucks for both, the industrial and the artisan production.

Find your clamping jaw quickly and simply at www.jawfinder.biz

Kitagawa

Soft top jaws, serration 60° 126
Reversible top jaws, hardened, serration 60° 127
Claw-type jaws, hardened, serration 60° 128
Soft segment top jaws, serration 60° 129

Errors and corrections are reserved!

Soft top jaws, serration 60°

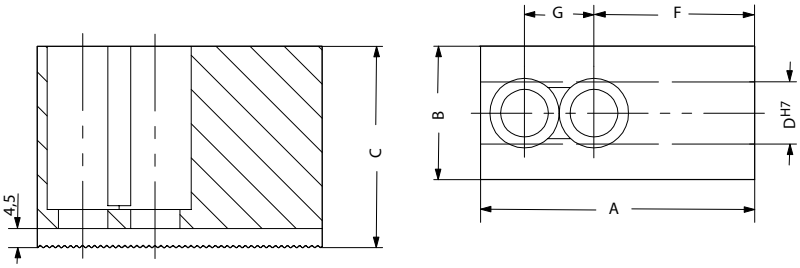

Tool group C 21
Type 543-32 **Soft top jaws, 3-jaw set, can be hardened, serration 60°** - material: 16 MnCr 5

Chuck Type	**3-jaw set**	Jaw length A	Jaw width B	Jaw height C	D	F	G	Serration	Weight approx. kg
B-204; B-205; N-04; N-05; NL04	**154863** ●	54	23	29	10	28	14	1,5 x 60°	0,25
B-206; B-206A5; BB206; BL-206; BL206A5; BS306; BS306A5; HOH-206; ML06; N-06; N-06A05; NL06; NL06A05	**154865** ●	72	30,5	43	12	37	20	1,5 x 60°	0,5
B-208; B-208A6; BB208; BL-208; BL208A6; BS308; BS308A6; HOH-208; ML08; N-08; N-08A06; NL08; NL08A06	**154867** ●	95	35	45,5	14	46	25	1,5 x 60°	0,9
B-208A6; N-08	**159780** ■	95	35	45,5	17	46	25	1,5 x 60°	2,7
A-10A06; B-210; B-210A6; B-210A8; BB210; BB210A6; BB210A8; BL-210; BL210A6; BL210A8; BS310; BS310A6; BS310A8; HOH-10K; N-10; N-10A08; NL10; NL10A06; NL10A08	**154869** ●	110	50	45	16	50	30	1,5 x 60°	1,7
B-212; B-212A6; B-212A8; BB212; BB212A6; BB212A8; BL-212; BL212A6; BL212A8	**154871** ●	130	50	55,5	21	52	30	1,5 x 60°	1,9

Reversible top jaws, hardened, serration 60°

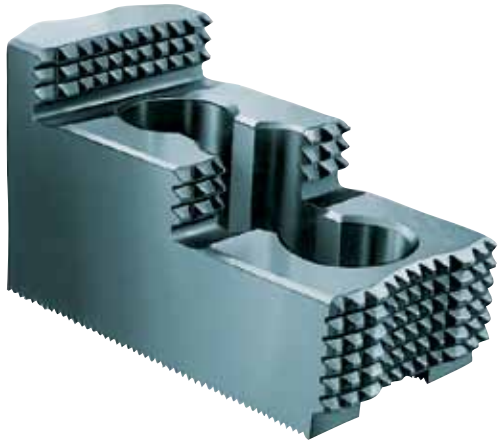

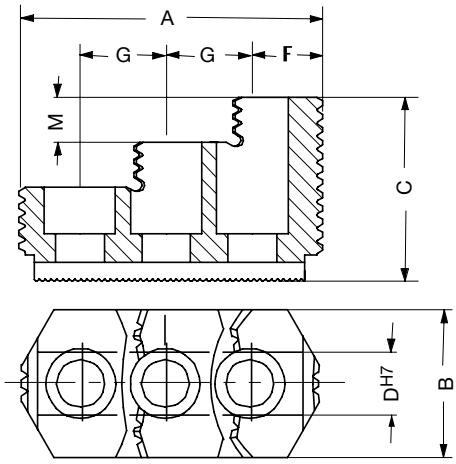

Tool group C 21
Type 543-31 **Reversible top jaws, 3-jaw set, hardened, serration 60°** - material: 16 MnCr 5

Chuck Type	3-jaw set	Jaw length A	Jaw width B	Jaw height C	D	F	G	M	Serration	Weight approx. kg
B-204; B-205; N-04; N-05; NL04	**154814**[1] ●	54	23	27,5	10	13	14	10	1,5 x 60°	0,16
B-206; B-206A5; BB206; BB206A5; BL-206; BL206A5; BS306; BS306A5; HOH-206; ML06; N-06; N-06A05; NL06; NL06A05	**154674**[1] ●	66	34,7	36	12	12,5	20	12	1,5 x 60°	0,3
B-208; B-208A6; BB208; BB208A6; BL-208; BL208A6; BS308; BS308A6; HOH-208; ML08; N-08; N-08A06; NL08; NL08A06	**154676** ●	81	36	49	14	17,5	25	12	1,5 x 60°	0,6
A-10A06; B-210; B-210A6; B-210A8; BB210; BL-210; BL210A6; BL210A8; BS310; BS310A6; BS310A8; HOH-10K; N-10; N-10A08; NL10; NL10A06; NL10A08	**154678** ●	99,5	44,5	54	16	25,5	30	13	1,5 x 60°	1,2
B-212; B-212A6; B-212A8; BB212; BB212A6; BB212A8; BL-212; BL212A6; BL212A8; HOH-12K; N-12	**154816**[1] ●	103	50	55,5	21	22,5	30	17	1,5 x 60°	1,5

[1] one step only
Hardened jaws, supplied as supplement or as spares, must be ground on the chuck.

Claw-type jaws, hardened, serration 60°

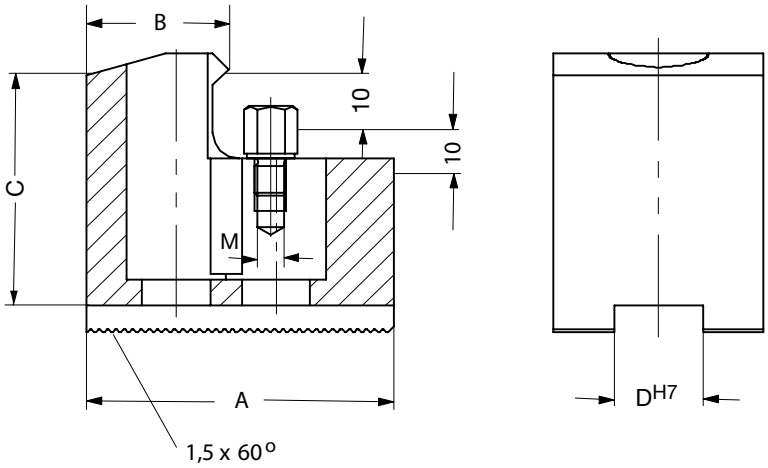

Tool group C 21
Type 543-33 **Claw-type jaws, 1 piece, hardened, serration 60°** - width of the groove **12/16**

Chuck Type	Item no.	Jaw length A	B	Jaw height C	D	Thread
B-206; B-206A5; BB206; BB206A5; BL-206; BL206A5; BS306; BS306A5; HOH-206; ML06; N-06; N-06A05; NL06; NL06A05	**156025** ■	**67**	53	45	12	M6
	156027 ■	**65**	46	45	12	M6
	156029 ■	**55**	40	45	12	M6
	161189 ■	**55**	24	45	12	M6
A-10A06; B-210; B-210A6; B-210A8; BB210; BB210A6; BB210A8; BL-210; BL210A6; BL210A8; BS310; BS310A6; BS310A8; HOH-10K; N-10; N-10A08; NL10; NL10A06; NL10A08	**156099** ●	**95**	80	50	16	M6
	156101 ●	**75**	60	50	16	M6
	156103 ●	**60**	43	50	16	M6
	156105 ●	**70**	37	50	16	M6

Tool group C 15
Type 544-00 **Interchangeable workpiece rests**, 1 piece, **in different lengths**

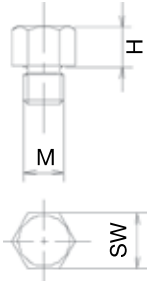

Item no.	Size	M	H	SW
289188 ●	**2**	M6	5	9
138950 ●	**2**	M6	10	9
725581 ●	**2**	M6	15	9

Soft segment top jaws, serration 60°

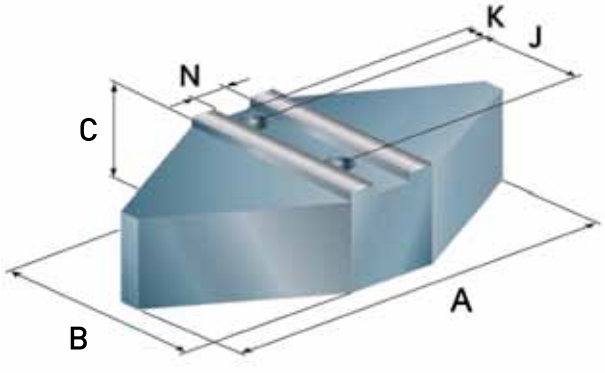

Design I

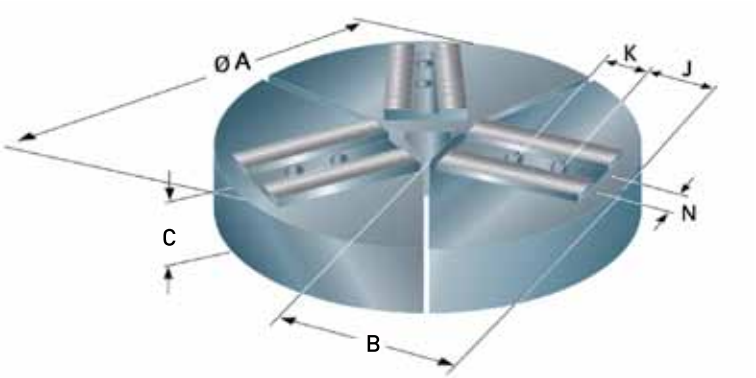

Design II

Tool group C 21
Type 9052 **Segment top jaws, 3 jaw set, can be hardened, serration 1,5x60° / 3x60°** - material: C15

Chuck Type	3-jaw set	A	B	C	N	K	J	Material	Design	Weight approx. kg
B-206; B-206A5; BL-206; BT206; HOH-206; N-06; N-06A05; NL06	**1032921** ■	120	60	60	12	15	20	steel	Design I	9
	1032922 ■	120	64	64	12	15	20	aluminium	Design I	3,2
	1032923 ■	169	76	76	12	20	20	steel	Design II	13
	1032924 ■	169	76	76	12	20	20	aluminium	Design II	4
B-208; B-208A6; BL-208; BT208; HOH-208; N-08; N-08A06; NL08	**1032925** ■	150	64	76	14	15	25	steel	Design I	14
	1032926 ■	150	64	76	14	15	25	aluminium	Design I	5
	1032927 ■	210	76	95	14	25,5	25	steel	Design II	20
	1032928 ■	210	76	95	14	25,5	25	aluminium	Design II	7
A-10A06; B-210; B-210A6; B-210A8; BL-210; BT210; HOH-10K; N-10; N-10A08; NL10	**1032929** ■	170	64	89	16	20	30	steel	Design I	20
	1032930 ■	170	64	89	16	20	30	aluminium	Design I	7
	1032931 ■	254	76	111	16	27	30	steel	Design II	29
	1032932 ■	254	76	111	16	27	30	aluminium	Design II	10
N-12; N-12A06; N-12A08; NL12	**1032933**	240	76	118	15	30	30	steel	Design I	28
	1032934	240	76	118	18	30	30	aluminium	Design I	10
	1032935	304	76	133	18	34	30	steel	Design II	41
	1032936	304	76	133	18	34	30	aluminium	Design II	14
B-212; B-212A6; B-212A8; BL-212; BT212	**1032937** ■	240	76	118	21	30	30	steel	Design I	28
	1032938 ■	240	76	118	21	30	30	aluminium	Design I	10
	1032939 ■	304	76	133	21	34	30	steel	Design II	41
	1032940 ■	304	76	133	21	34	30	aluminium	Design II	14
B-15; B-15A08; B-15A11; B-18; B-18A11; HOH-15K	**1032941** ■	280	76	152	22	30	30	steel	Design I	40
	1032942 ■	280	76	152	22	30	30	aluminium	Design II	13
	1032943 ■	381	76	171	22	34	30	steel	Design II	56
	1032944 ■	381	76	171	22	34	30	aluminium	Design II	19

www.jawfinder.biz

- **Quickly and simply to the right clamping jaw!**
- **Only three steps to the right clamping jaw**
- **Find the right jaw also for all common manufacturers**
- **Choose from a broad range of jaws**
- **convenient enquiry function**

RÖHM Accessories

Jaw cutting attachment BAV, for 3-jaw chucks 132
Checklist for special jaws 134

Errors and corrections are reserved!

Jaw cutting attachment

BAV

For turning unhardened jaws and grinding hardened jaws, with reversible and steppless adjustable setting jaws.

The BAV cutting attachment is mainly used for turning the inside and outside diameters of soft jaws on 3-jaw chucks.
It permits the chuck to be adjusted to the condition in which the work piece will be gripped within a few seconds (pretightening).
This assures positive gripping and accurate concentricity of the machined clamping surfaces of the chuck jaws in the tightened condition.

Technical features:

- only applicable with base jaws (GB) and top jaws (AB)

Tool group A09
Type 091 **Jaw cutting attachment** for **three-jaw chucks**

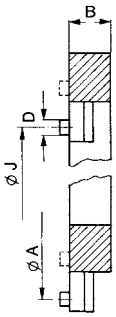

Item no.	Size	For chuck size	Load max.	External Ø	Inner Ø	Overhang distance Ø J	Overhang distance Ø A	B	Thread	Weight approx. kg
220206[1] ●	0	125	15	153	110	50-115	150-215	20	M5	1,6
220207 ●	1	200	30	176	110	35-125	170-260	31	M8	3,4
220208 ●	2	250	30	215	135	70-140	215-285	31	M8	5
220209 ●	3	250	30	244	162	100-175	240-315	31	M8	5,7
220210 ●	4	315	30	290	208	145-215	290-360	31	M8	6,9
220211 ●	5	400	40	342	260	160-270	330-440	31	M10	8,5

[1] light-duty design

● from stock ■ within 4 weeks

Questionnaire for chuck jaws in special design

Sales Agent _____ Date _____ Delivery date _____ Quantity _____

Company name _____ Contact person _____ Phone _____

_____ Department _____ Fax _____

Workpiece to be clamped

☐ Workpiece name: _____

☐ Material _____ ☐ Sample workpiece will be sent

☐ Raw clamping surface ☐ Prepared ☐ Ready

☐ Clamping mark permitted ☐ Yes ☐ No

☐ Deformation permitted _____ mm ☐ Not permitted

NOTE:
Please mark or color the clamping and locating area on the drawing of the workpiece.

Please mark the machining area.

Workpiece machining

☐ Turning ☐ Grinding ☐ Drilling

☐ Roughing ☐ Finishing ☐ Milling

☐ With coolant ☐ Without coolant ☐ Other

☐ Machining of the backside? Indicate dimensions for space

Cutting speed _____ m/min
V-Constant ☐ Yes ☐ No
Feed rate _____ mm/U
Cutting depth _____ mm
Max. application speed _____ min^{-1}
Max. speed of machine _____ min^{-1}
Torque _____ Nm or _____ daNm

Design of jaws

☐ hard
☐ soft

☐ External clamping ☐ Internal clamping

☐ Hard ☐ Soft

☐ Rigid ☐ Pendular

☐ Smooth ☐ Diamond serration

☐ Claws ☐ Carbide insert

☐ Quick-acting change system

☐ Square-clamping Dimension _____ mm Clamping depth _____ mm

Details on the chuck

Manufacturer _____ Type/Size _____ Number of jaws _____

Weight _____ Height _____ Jaw stroke _____

Jaw interface ☐ Slot and serration (in case of a special chuck please enclose a drawing) ☐ Width of slot _____ mm

☐ Serration ☐ 1/16´´ x 90° ☐ 3/32´´ x 90° ☐ 1.5 x 60° ☐ Modul 2 ☐ Special serration ☐ Tongue and groove

☐ 6-point-clamping radial

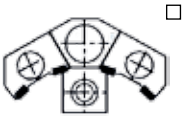

☐ 12-point-clamping radial

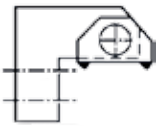

☐ Pendulum jaws, axially

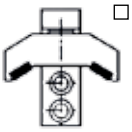

☐ Pendulum jaws axially and radially

Details of the machine

Max. swing-Ø _____ mm

Machining direction ☐ Horizontally ☐ Vertically ☐ Stationary ☐ Rotating

Loading ☐ Manually

☐ Automatically (indicate disturbing edges for the handling device!)

Balancing
Q= 6.3
to VDI 2060

☐ Yes ☐ No
☐ With workpiece ☐ Without workpiece

NOTE: In case of an order please send in a workpiece sample

Grinding

☐ Clamping-Ø and workpiece stop preground for finish grinding on the matching chuck at the customer

☐ Clamping-Ø and workpiece stop ground or nukked in a RÖHM-device, T.I.R.-accuracy 0,03mm

Considet the runout of the chuck

Questionnaire for chuck jaws in special design

Sales Agent _____ Date _____ Delivery date _____ Quantity _____

Company name _____ Contact person _____ Phone _____

_____ Department _____ Fax _____

Workpiece to be clamped

☐ Workpiece name: _____

☐ Material _____ ☐ Sample workpiece will be sent

☐ Raw clamping surface ☐ Prepared ☐ Ready

☐ Clamping mark permitted ☐ Yes ☐ No

☐ Deformation permitted _____ mm ☐ Not permitted

NOTE:
Please mark or color the clamping and locating area on the drawing of the workpiece.

Please mark the machining area.

Workpiece machining

☐ Turning ☐ Grinding ☐ Drilling

☐ Roughing ☐ Finishing ☐ Milling

☐ With coolant ☐ Without coolant ☐ Other

☐ Machining of the backside? Indicate dimensions for space

Cutting speed _____ m/min
V-Constant ☐ Yes ☐ No
Feed rate _____ mm/U
Cutting depth _____ mm
Max. application speed _____ min^{-1}
Max. speed of machine _____ min^{-1}
Torque _____ Nm or _____ daNm

Design of jaws

☐ hard
☐ soft

☐ External clamping ☐ Internal clamping

☐ Hard ☐ Soft

☐ Rigid ☐ Pendular

☐ Smooth ☐ Diamond serration

☐ Claws ☐ Carbide insert

☐ Quick-acting change system

☐ Square-clamping Dimension _____ mm Clamping depth _____ mm

Details on the chuck

Manufacturer _____ Type/Size _____ Number of jaws _____

Weight _____ Height _____ Jaw stroke _____

Jaw interface ☐ Slot and serration (in case of a special chuck please enclose a drawing) ☐ Width of slot _____ mm

☐ Serration ☐ 1/16´´ x 90° ☐ 3/32´´ x 90° ☐ 1.5 x 60° ☐ Modul 2 ☐ Special serration ☐ Tongue and groove

☐ 6-point-clamping radial

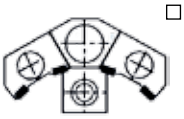

☐ 12-point-clamping radial

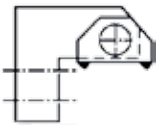

☐ Pendulum jaws, axially

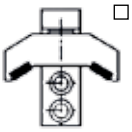

☐ Pendulum jaws axially and radially

Details of the machine

Max. swing-Ø _____ mm

Machining direction ☐ Horizontally ☐ Vertically ☐ Stationary ☐ Rotating

Loading ☐ Manually

☐ Automatically (indicate disturbing edges for the handling device!)

Balancing
Q= 6.3
to VDI 2060

☐ Yes ☐ No
☐ With workpiece ☐ Without workpiece

NOTE: In case of an order please send in a workpiece sample

Grinding

☐ Clamping-Ø and workpiece stop preground for finish grinding on the matching chuck at the customer

☐ Clamping-Ø and workpiece stop ground or nukked in a RÖHM-device, T.I.R.-accuracy 0,03mm

Considet the runout of the chuck

The headquarter: our parent plant in Sontheim/Brenz.

The RÖHM parent plant is located in Sontheim/Brenz. In this ultra-modern production facility comprising 41,000 m², optimum conditions have been achieved in order to solve the extensive range of discerning construction and production tasks making the company even better, faster and more efficient in the future.

Sontheim/Brenz

All national and international activities are planned and co-ordinated at the administrative headquarters in Sontheim. Thanks to the excellent infrastructure and transport routes available, this location is ideal for a company relying on perfect product quality as well as maximum flexibility. Furthermore, the region around Sontheim offers another key basis for the success of our company: it is rich in quality awareness and motivated employees with the result that we are ideally prepared for the challenges of the future. The parent plant uniquely unites mass production, serial production and customised individual production under a single roof.

Key locations for the company: Dillingen and St. Georgen.

Such strong growth on the part of the RÖHM Group is also obviously associated with higher requirements on development and production capacities. The demands of today and tomorrow can be complied with the two facilities in Dillingen and St. Georgen.

Dillingen/Danube

St. Georgen

Plant: Dillingen/Danube | This branch plant in Dillingen was put into operation by the RÖHM Group as early as 1953. Thanks to extremely positive development, the plant is subject to constant expansion and modernisation. For this reason, new modern production facilities were built in 1982 and 1991. In 2007 RÖHM built a new production hall for two portal turning and milling machines. This enables machining of workpieces up to 4 metres in length which will secure a leading market position for the RÖHM brand in the future.
More than 300 employees are primarily involved in engineering and manufacturing lathe chucks, machine vices and special clamping equipment for turning and milling machinery as well as for machining centres.

Engineering and sales department St. Georgen | Apart from standard mandrels, tailor-made solutions for a wide variety of requirements are also manufactured here in this small but accomplished high-tech forge. RÖHM retains mechanical or power-operated mandrels, sliding jaw mandrels and hydraulic mandrels for its customers for tensioning workpieces in drill holes or interior contours.

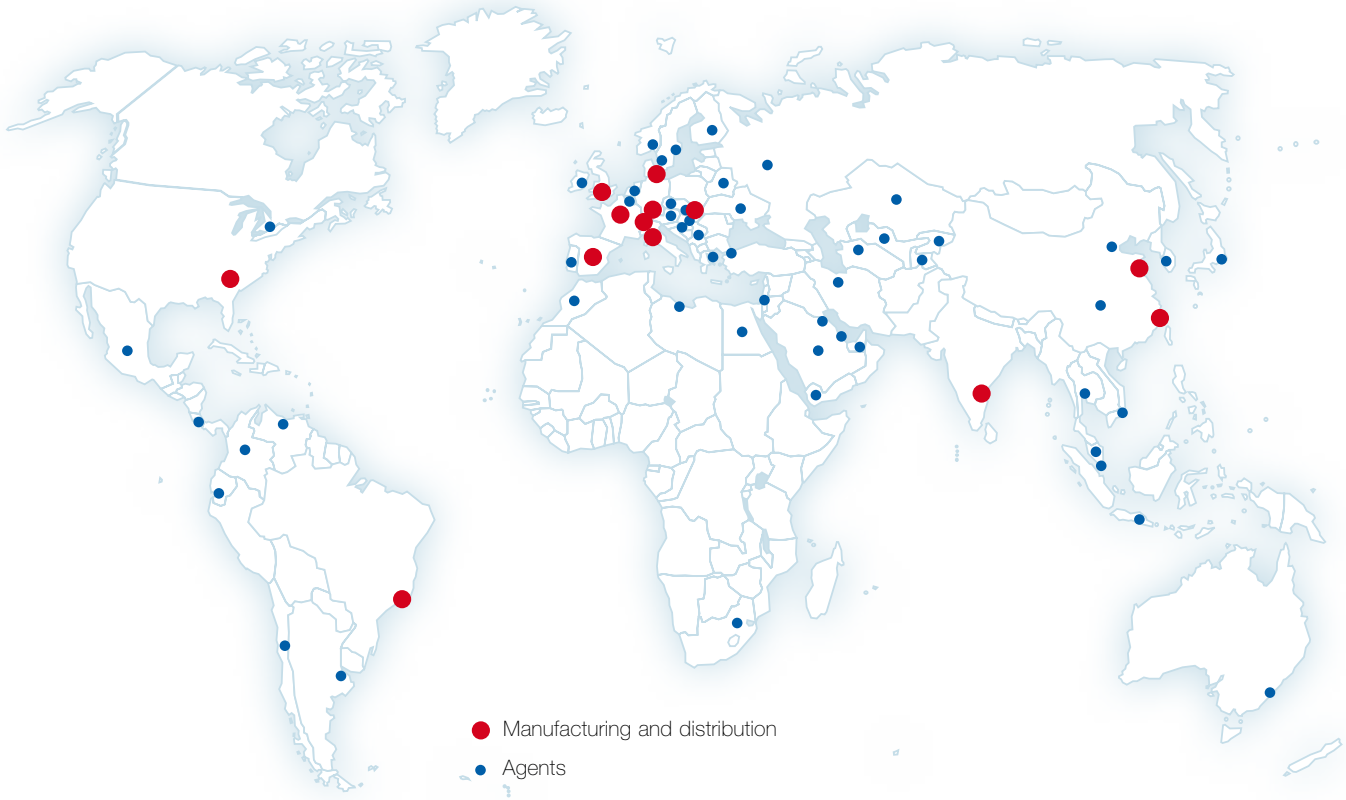

Always close to our customers. With locations all around the world.

Customer orientation at RÖHM has less to do with marketing than with attitude. We consider customer proximity as an intensive dialogue with our partners as well as direct presence on key international markets.
The RÖHM manufacturing and distribution bases:

RÖHM IND. E COM. DE FERRAMENTAS DE FIXAÇÃO LTDA.
Brazil

ROEHM China Co., Ltd.
China

RÖHM Værktoj A. S.
Denmark

RÖHM S. A. R. L.
France

ROHM (Great Britain) LTD.
Great Britain

RÖHM SLOVAKIA S.R.O.
Slovakia

ROHM INDIA PVT. LTD.
India

RÖHM Italia S. R. L.
Italy

RÖHM Spanntechnik AG
Switzerland

RÖHM Iberica S. A.
Spain

ROHM Products of America
USA

Your contacts at RÖHM.

Manufacturing and distribution bases

Germany:
RÖHM GmbH
Heinrich-Röhm-Straße 50
89567 Sontheim/Brenz
Tel 0049 73 25 – 16-0
Fax 0049 73 25 – 16-510
info@roehm.biz
www.roehm.biz

RÖHM GmbH
Röhmstraße 6
89407 Dillingen
Tel 0049 90 71 – 5 08-0
Fax 0049 90 71 – 5 08-174
infodlg@roehm.biz

RÖHM GmbH
Feldbergstr. 5
78112 St. Georgen
Tel 0049 – 77 24 – 94 68 12
Fax 0049 – 77 24 – 51 89
Mobil 0049 – 152 – 22 88 70 50
stg.info@roehm.biz

Brazil:
RÖHM IND. E COM. DE FERRAMENTAS DE FIXAÇÃO LTDA.
Rod. Raposo Tavares, Km 14, s/nº
Bloco A e C - Parte -Jardim Bandeirantes
CEP 05576-900 - São Paulo
Tel 0055 – 11 – 37 32 22 22
Fax 0055 – 11 – 37 35 30 97
vendas@rohm.com.br

China:
ROEHM China Co., Ltd.
Building 3, No. 388 Xinrun Road
Xinqiao Industrial Zone,
Songjiang District
Shanghai. PRC. Post Code: 201612
Tel 0086 - 21 - 37 70 53 95
Fax 0086 – 21 – 37 70 53 76
roehmcn@roehm.biz

ROEHM WEIDA MACHINERY (Shandong) Co. Ltd. (Joint Venture)
ADD: 2 Zhonghan Road
Manshan Town Wendeng Shandong
China 264414
Tel 0086 – 631 – 8 54 99 86
Fax 0086 – 631 – 8 54 50 18
lts@weidapeacock.com

Denmark:
RÖHM Værktoj A.S.
Gunnekær 2,
2610 Rødovre
Tel 0045 – 36 – 41 22 66
Fax 0045 – 36 – 41 44 72
info@roehm.dk

France:
RÖHM S.A.R.L.
325, rue Paul Langevin
60740 St. Maximin
Tel 0033 – 344 64 10 00
Fax 0033 – 344 64 00 68
fr.roehm@roehm.biz
www.rohm.fr

Great Britain:
ROHM (Great Britain) LTD.
Unit 12 the ashway centre
Elm cresent Kingston-upon-Thames
Surrey KT 2 6 HH
Tel 0044 – 20 85 49 66 47
Fax 0044 – 20 85 41 17 83
rohmgb@roehm.biz
www.uk.roehm.biz

India:
ROHM INDIA PVT. LTD.
Plot No. A-53(B), Nallekandernahall
Peenya 2nd Stage Industrial Area
2nd Main Road
560058 Bangalore India
Tel 0091 – 80 – 41 49 29 07
Fax 0091 – 80 – 28 36 76 56
kthomas_64@yahoo.com

Italy:
RÖHM Italia S.R.L.
Via Brescia 24/C
20063 Cernusco S. Naviglio
Tel 0039 – 02 – 92 10 35 31
Fax 0039 – 02 – 92 10 17 53
rohmitalia@roehm.biz
www.roehm-italia.it

Slovakia:
RÖHM Slovakia s.r.o.
Partizanska 73
95701 Banovce nad Bebravou
Slovakia
Tel 00421 – 3 87 60 02 22
Fax 00421 – 3 87 60 02 24
info@roehm.sk

Spain + Portugal:
RÖHM Iberica S.A.
C/Rejas, No. 9 Nave 11 D
28022 Madrid
Tel 0034 – 91 – 3 13 57 90
Fax 0034 – 91 – 3 13 57 93
rohmiberica@roehm.biz
www.roehm-iberica.es

Switzerland:
RÖHM Spanntechnik AG
Feldstraße 39, 3360 Herzogenbuchsee
Tel 0041 – 629 56 30 20
Fax 0041 – 629 56 30 29
roehmch@roehm-spanntechnik.ch
www.ch.roehm.biz

USA:
ROHM Products of America
5155 Sugarloaf Parkway, Suite K
Lawrenceville, GA 30043
Tel 001 – 770 – 963 - 8440
Fax 001 – 770 – 963 - 8407
rohmusa@roehm.biz
www.us.roehm.biz

Presence on all continents from A for Australia to V for Venezuela. You can receive the contact information of our worldwide representations easily through www.roehm.biz

Sales Agents in Germany

Clamping technology
- manual -

Baden-Württemberg:
Werner Schmautz
Tel. 0 78 02 / 98 27 51,
Fax 0 78 02 / 7 00 94 27
Mobil 0152 / 22 88 70 23
E-mail: werner.schmautz@roehm.biz

Bayern (south):
Dieter Rabus
Tel. 0 73 54 / 9 37 49 74,
Fax 0 73 47 / 9 37 49 75
Mobil 0152 / 22 88 70 24
E-mail: dieter.rabus@roehm.biz

Bayern (north):
Gerhard Häutle
Tel. 0 90 71 / 7 22 03
Fax 0 90 71 / 7 22 03
Mobil 0152 / 22 88 70 15
E-mail: gerhard.haeutle@roehm.biz

Hessen:
Joachim Nagel
Tel. 0 60 45 / 98 39 00
Fax 0 60 45 / 98 39 01
Mobil 0171 / 6 20 91 59
E-mail: joachim.nagel@roehm.biz

Niedersachsen:
Reiner Maahs
Tel. 0 52 31 / 8 73 26
Fax 0 52 31 / 8 73 26
Mobil 0152 / 22 88 70 16
E-mail: reiner.maahs@roehm.biz

Nordrhein-Westfalen:
Ralf Schnichels
Tel. 0 21 61 / 9 99 72 43,
Fax 0 21 61 / 9 99 72 47
Mobil 0152 / 22 88 70 25
E-mail: ralf.schnichels@roehm.biz

Thorsten Nolte
Tel. 0 27 21 / 12 01 82
Fax: 0 27 21 / 71 70 69
Mobil 0152 / 22 88 70 31
E-mail: thorsten.nolte@roehm.biz

Berlin, Mecklenburg-Vorpommern, Brandenburg, Sachsen-Anhalt:
Hendrik Seifert
please see - power operated -

Sachsen, Sachsen-Anhalt,Thüringen:
Thomas Fischer
please see - power operated -

Hamburg, Bremen, Schleswig-Holstein:
Michael Biß
Tel. 0 431 / 3 97 09 59,
Fax: 0 431 / 3 97 09 60
Mobil 0152 / 22 88 70 27
E-mail: michael.biss@roehm.biz

Automation Technology

Germany / Europe
Robert Baß
Tel. 0 73 22 / 91 13 37
Fax 0 73 22 / 91 13 38
Mobil 0152 / 22 88 70 33
E-mail: robert.bass@roehm.biz

Clamping technology
- power operated -

Baden-Württemberg:
Michael Schmitz
Tel. 00 33 / 388 72 04 03
Fax 00 33 / 173 76 87 00
Mobil 00 49 (0)152 / 22 88 70 18
E-mail: michael.schmitz@roehm.biz

Michael Hartmann
Tel. 0 90 73 / 91 41 6
Fax 0 90 73 / 91 41 7
Mobil 0152 / 22 88 70 28
E-mail: michael.hartmann@roehm.biz

Frank Stier
Tel. 0 74 26 / 91 37 70,
Fax: 0 74 26 / 91 38 84
Mobil 0152 / 22 88 70 19
E-mail: frank.stier@roehm.biz

Richard Sedlak
Tel. 0 70 21 / 94 98 97 0
Fax. 0 70 21 / 94 90 72
Mobil 0152 / 22 88 70 30
E-Mail: richard.sedlak@roehm.biz

Bayern (south):
Dieter Baz
Tel. 08649 / 98 63 75
Fax. 08649 / 98 63 76
Mobil 0152 / 22 88 70 26
E-mail: dieter.baz@roehm.biz

Bayern (north):
Christian M. Merkel
Tel. 0 91 61 / 66 41 39
Fax 0 91 61 / 66 41 45
Mobil 0152 / 22 88 70 14
E-mail: christian.merkel@roehm.biz

Berlin, Mecklenburg-Vorpommern, Brandenburg, Sachsen-Anhalt:
Hendrik Seifert
Tel. 0 30 / 70 07 24 59
Fax 0 30 / 70 07 24 59
Mobil 0152 / 22 88 70 32
E-mail: hendrik.seifert@roehm.biz

Hessen:
Klaus Dieter Hofmann
Tel. 0 64 06 / 90 67 40
Fax 0 64 06 / 90 67 43
Mobil 0152 / 22 88 70 29
E-mail: k.d.hofmann@roehm.biz

Niedersachsen:
Reiner Maahs
please see - manual -

Hamburg, Bremen, Schleswig-Holstein:
Michael Biß
please see - manual -

Nordrhein-Westfalen:
Friedhelm Schneider
Tel. 0 27 62 / 49 07 28
Fax 0 27 62 / 49 07 29
Mobil 0152 / 22 88 70 17
E-mail: friedhelm.schneider@roehm.biz

Thorsten Nolte
please see - manual -

Sachsen, Sachsen-Anhalt,Thüringen:
Thomas Fischer
Tel. 0 37 41 / 52 13 56
Fax 0 37 41 / 52 97 70
Mobil 0152 / 22 88 70 10
E-mail: thomas.fischer@roehm.biz

Mandrel Technology

Germany
Thomas Haas
Tel. 0 77 25 / 91 48 95
Fax 0 77 25 / 91 48 96
Mobil 0152 / 22 88 71 20
E-mail: thomas.haas@roehm.biz

Agents worldwide

Argentina:
Himaq S.R.L.,
Venezuela 3652,
1603 Villa Martelli
Prov. Buenos Aires
Tel. 00 541 / 147 093 505,
Fax 00 541 / 147 093 472
E-mail: himaq@himaq.com.ar

Australia:
White International Pty. Ltd.,
PO Box 304 Milperra
LPO NSW 2214
Tel. 00 61 / 2 97 83 60 00
Fax 00 61 / 2 97 83 60 01
E-mail: sales@whiteint.com.au

Austria:
Richard Schörkhuber
Lichtenhof 2 b
8511 St. Stefan ob Stainz
Tel. 00 43 / 34 63 / 8 15 10
Fax 00 43 / 34 63 / 8 15 60
Mobil 00 43 / 664 / 9 23 77 10
E-mail: richard.schoerkhuber@roehm.biz

Schachermayer GmbH,
Schachermayer Str. 2
Postfach 3000, 4021 Linz
Tel. 00 43 / 732 / 65 99 - 0,
Fax 00 43 / 732 / 65 99 14 44
E-mail: maschinenmetall@schachermayer.at

Lackner u. Urnitsch GmbH
Bahnhofgürtel 37
8020 Graz
Tel. 00 43 / 316 / 71 14 80-0
Fax 00 43 / 316 / 71 14 80 39
E-mail: lackner@urnitsch.at

Haberkorn Ulmer GmbH
Hohe Brücke
6961 Wolfurt
Tel. 00 43 / 55 74 / 69 5-0
Fax 00 43 / 55 74 / 69 5-99
E-mail: info.wolfurt@haberkorn.com

Metzler GmbH u. Co. KG
Oberer Paspelsweg 6-8
6830 Rankweil
Tel. 00 43 / 55 22 / 7 79 63 - 0
Fax 00 43 / 55 22 / 7 79 63 - 6
E-mail: office@metzler.at

Belgium:
(Clamping technology - manual -)
BELTRACY
Bergensesteenweg 189
1600 Sint-Pieters-Leeuw
Tel. 00 32 / 25 43 68 90
Fax 00 32 / 25 38 59 10
E-mail: info@beltracy.be
www.beltracy.be

(Clamping technology - power operated -)
RÖHM S.A.R.L.
325, rue Paul Langevin
60740 St. Maximin
France
Tel. 0033 / 344 64 10 00
Fax. 0033 / 34 64 00 68
E-mail: fr.roehm@roehm.biz
www.rohm.fr

Bosnia-Herzegovina:
Kruhek d.o.o.,
Veprinacka 16,
10000 Zagreb (Kroatien)
Tel. 00 38 / 513 695 138
Fax 00 38 / 513 639 530
E-mail: kruhek@zg.t-com.hr

Canada:
(Clamping technology - manual -)
Sowa Tool & Machine CO. LTD
500 Manitou drive
N2G 4B6 Kitchener, Ontario
Tel. 001 / 519 / 748 / 57 50
Fax 001 / 519 / 748 / 93 04
E-mail: sales@sowatool.com

(Clamping technology - power operated -)
ROHM Products of America
5155 Sugarloaf Parkway, Suite K
Lawrenceville, GA 30043
Tel. 001 / 770 / 963 / 8440
Fax 001 / 770 / 963 / 8407
E-mail: rohmusa@roehm.biz
www.us.roehm.biz

Chile:
Robert Kralemann, SERVICOMP Ltda.
Av. Departamental 1595
La Florida - Santiago
Tel. 00 56 / 2 / 8 89 47 00
E-mail: rkralemann@gmail.com

Columbia:
Imocom S. A.
Apartado Aereo 12287, Bogota D. E. 6
Tel. 00 57-1 / 2 62 38 00
Fax 00 57-1 / 2 62 49 82
E-mail: imocom@imocom.com.co

Costa Rica:
Servicios Centroamericanos, S.A.
625 Mts. Este del Parque de Tibás,
frente a Autos La FLORIDA, SAN JOSÈ,
COSTA RICA
P.O. Box : 4711-1000 SAN JOSE,
COSTA RICA
Tel. 00 506 / 2 40 11 11
Fax 00 506 /2 40 22 22
E-mail: sercensa@sercensa.com

Croatia:
Kruhek d.o.o., Veprinacka 16
10000 Zagreb (Croatia)
Tel. 00 385 - / 0 / 1 - 36 95 - 138
Fax 00 385 - / 0 /1 - 36 39 - 530
GSM: 00 385 - / 0 / 98 - 382 - 003
E-mail: kruhek@zg.t-com.hr
www.kruhek.hr

Czech Republic:
Jan Vyslouzil
Jiráskova 551
76824 Hulin
Tel. 00 420 / 5 73 35 18 00
Fax 00 420 / 5 73 35 29 00
E-mail: janvyslouzil@iol.cz

Ecuador:
Maquinarias Henriques C.A.
Casilla 4361, Via a Daule KM.6 1/2
Guayaquil / Ecuador
Tel. 00 593 - 4 / 2 25 43 00
Fax 00 593 - 4 / 2 25 43 00 181
E-mail: info@maquinarias-henriques.com

Finland:
Oy Interfii Ltd,
Teollisuuskatu 35-39 LH4
20520 Turku
Y-tunnus 2374026-3
Tel. 00 358 / 2 01 47 45 00
Fax. 00 358 / 2 01 47 45 01
Email: info@interfii.com

(Clamping technology - manual -)
Teräskonttori Oy,
Muuntotie 3,
1510 Vantaa
Tel. 00 358 / 9 61 54 71
Fax 00 358 / 9 67 49 54
E-mail: info@teraskonttori.fi

Greece:
Stefanos Papadopoulos,
Kifisiasstr. 15,
54655 Thessaloniki
Tel. 00 30 / 23 10 48 87 58
Fax 00 30 / 23 10 48 87 53
E-mail: ST-papas@otenet.gr

Hungary:
Fairtool GmbH
Koebanyai ut. 47/B
H-1101 Budapest
Tel. 00 361 / 8 14 46 21
Fax 00 361 / 2 61 95 61
E-mail: jozsef.alker@fairtool.hu

Indonesia:
GP System Singapur PTE LTD
No. 51, Bukit Batok Crescent,
#04-04/05 Unity Centre
Singapore 658077
Tel. 00 65 / 68 61 - 26 63, Fax: 35 00
E-mail: enquiry@gpsystem.com

Agents worldwide

Iran:
Sakht Abzar Pars Co. (SAP)
No. 19/4 Saeb Tabrizi St.,
North Abbas Shirazi Ave,
Molla Sadra Ave.,
Tehran post code 19917
Tel. 00 98 / 21 / 88 03 18 88
Fax 00 98 / 21 / 88 03 77 33
E-mail: sales@sap-iran.com

Ireland:
ROHM (Great Britain) LTD.
Unit 12 the ashway centre
Elm cresent Kingston-upon-Thames
Surrey KT 2 6 HH
Tel. 0044 - 20 85 49 66 47
Fax. 0044 - 20 85 41 17 83
rohmgb@roehm.biz
www.uk.roehm.biz

Israel:
ETMOS Tool Distributing Co. Ltd.
Industrial Zone, P.O. Box 1786,
Holon 58117
Tel. 00 972 - 3 / 55 81 933
Fax 00 972 - 3 / 55 81 934
E-mail: etmos@etmos.co.il

Japan:
Takeda Trade Co., Ltd.
Tokyo office
113-0033, 3-5-2 Hongo
Bunkyo-ku
Tokyo / Japan
Tel. 00 81/33815 6501
Fax 00 81/33816 4522
E-mail: hata@takeda-trade.co.jp

Luxembourg:
RÖHM S.A.R.L.,
325 rue Paul Langevin
60740 St. Maximin
Tel. 00 33 / 3 44 64 10 00
Fax 00 33 / 3 44 64 00 68
E-mail: fr.roehm@roehm.biz

Malaysia:
GP System Singapur PTE LTD
No. 51, Bukit Batok Crescent,
#04-04/05 Unity Centre
Singapore 658077
Tel. 00 65 68 61 - 26 63, Fax: 35 00
E-mail: enquiry@gpsystem.com

Marocco:
Somadu
20-22, Bd. Abdellah Ben
Yacine, Casablanca 20300
Tel. 00 21 222/30 05 90, Fax 45 06 10
E-mail: alaoui.my.youssef@somadu.com

Macedonia:
G.T.M.Co. d.o.o.
Export - Import
Autoput Bg - Zg br. 22
11080 Beograd
Srbija i Crna Gora
Tel. 00 381 / 1 13 14 90 24
Fax 00 381 / 1 13 14 90 21
E-mail: vladimir.rackovic@gtmco.rs

Mexico:
Sales Power de Mexico S.A. DE C.V.
Calle Jalpan No. 701
76030 C.P. QUERETARO, QRO.-COL.EST
Tel. 00 52 - 442 / 2 14 55 43
Fax 00 52 - 442 / 2 24 01 12
E-mail:salesfob@salespower-tools.com

Netherlands:
(Clamping technology - manual -)
Boorwerk B.V.,
Flevolaan 52 A,
Industrieterrian Noord
1382 JZ Weesp
Tel. 00 31 / 294 / 43 20 50
Fax 00 31 / 294 / 43 21 52
E-mail: info@boorwerk.nl

(Clamping technology - power operated -)
Friedhelm Schneider
Tel. 0049 / 27 62 / 49 07 28
Fax 0049 / 27 62 / 49 07 29
E-mail: friedhelm.schneider@roehm.biz

Norway:
Ing. Yngve Ege A/S
Ryenstubben 5
0679 Oslo 11
Tel. 00 47 / 23 24 10 00
Fax 00 47 / 23 24 10 01
E-mail: ege@ege.no

Poland:
RÖHM GmbH
Heinrich-Röhm-Straße 50
89567 Sontheim/Brenz (Germany)
Tel 0049 73 25 – 16-0
Fax 0049 73 25 – 16-512
info@roehm.biz

Portugal:
RÖHM Iberica S. A.
C/Rejas, No. 9 Nave 11 D
28022 Madrid
Tel. 0034 / 91 / 3 13 57 90
Fax 0034 / 91 / 3 13 57 93
rohmiberica@roehm.biz
www.rohm-iberica.es

Russia:
RÖHM GmbH
Heinrich-Röhm-Straße 50
89567 Sontheim/Brenz (Germany)
Tel 0049 73 25 – 16-0
Fax 0049 73 25 – 16-512
info@roehm.biz

OOO T.W.L -Group
Kosmonavta Volkova 5, stroenie 1,
127299 Moscow, Russia
Tel. 007 / 495 / 5 04 72 39
007 / 903 / 1 03 29 02
Fax 007 / 495 / 6 18 42 68
E-mail: sales@twl-group.ru

Saudi-Arabia, VAE, Bahrain, Kuwait, Yemen, Libya, Egypt:
Dirk Jaegemann
Trade agency GmbH & Co. KG
Julius-Bamberger-Str. 1
28279 Bremen
Tel. 04 21 / 8 39 21 30
Fax 04 21 / 8 39 89 21
E-mail: info@djta.de

Sweden:
Techpoint Systemteknik AB
Nyponvaegen 4
19144 Sollentuna
Tel. 00 46 / 86 23 13 30
Fax 00 46 / 86 23 13 45
E-mail: info@techpoint.se

Serbia-Montenegro:
G.T.M.Co. d.o.o.
Export - Import
Autoput Bg - Zg br. 22
11080 Beograd
Srbija i Crna Gora
Tel. 00 381 / 1 13 14 90 24
Fax 00 381 / 1 13 14 90 21
E-mail: vladimir.rackovic@gtmco.rs

Singapore:
GP System Singapur PTE LTD
No. 51, Bukit Batok Crescent,
#04-04/05 Unity Centre
Singapore 658077
Tel. 00 65 / 68 61 - 26 63,
Fax 00 65 / 68 61 - 35 00
E-mail: enquiry@gpsystem.com

Slovenia:
Kruhek d.o.o., Veprinacka 16
10000 Zagreb (Kroatien)
Tel. 00 385 / 13 69 51 38
Fax 00 385 / 13 63 95 30
E-mail: kruhek@zg.t-com.hr

Slovakia:
MCS s. r. o.
Heckova 31
SK - 97201 Bojnice
Tel. 00 421 / 4 65 40 20 50
Fax 00 421 / 4 65 40 20 48
E-mail: michalovic@mcs.sk

South Africa:
Kingstone Tools & Accessories
P.O. Box 75746
2047 Gardenview
Tel. 00 27 / 11 / 6 22 16 68 / 9
Fax 00 27 / 6 15 42 10
E-mail: rohmtools@mweb.co.za

South-Korea:
Cheong Do Trading Co., Ltd.
RM-6-103, 604-1
Kuro-Dong, Kuro-Ku, Seoul
Tel. 00 822 / 6 78 41 55
Fax 00 822 / 67 25 48 3
E-mail: CDMT@chollian.net

Taiwan:
V.T.M. Company Ltd.
No. 13-1 11th Road,
Taichung Industrial Park
Taichung, TAIWAN
Tel. 00 886 / 4 / 23 59 27 59
Fax 00 886 / 4 / 23 50 74 27
Email: luck@vtm.com.tw
Email: lily@vtm.com.tw

Thailand:
GP System Singapur PTE LTD
No. 51, Bukit Batok Crescent,
#04-04/05 Unity Centre
Singapore 658077
Tel. 00 65 / 68 61 / 26 63
Fax 00 65 / 68 61 / 35 00
E-mail: enquiry@gpsystem.com

Turkey :
Sintek Mühendislik Makina San.
Ve Tic. Ltd. Sti.
Tarabya Mahallesi
Yumak Sok. No: 3/A1
34457 SARIYER – ISTANBUL
Tel. 00 90 / 212 / 2 99 61 84
Fax 00 90 / 212 / 2 99 56 75
E-Mail: sinan.onurlu@sintekmuhendislik.com

Ukraine:
T.W.L.-JUGA-Service
41, Gradonochalnitzkaya str. 1
65005 Odessa, Ukraine
Tel. 00380 / 48 / 79 5 85 64
Fax 00380 / 48 / 7 94 94 68
E-mail: jugtech@twlweb.biz

Venezuela:
Hartung Hnos. Sucr. C. A.,
Apartado 2480
Caracas 1010-A / Venezuela
Tel. 00 58 / 212 / 54 20 820
Fax 00 58 / 212 / 54 19 449
E-mail: claus@hartung.com.ve

Maquinaria Diekmann S.A.
AV. Humboldt – Las Acacias
CARACAS 1040 / VENEZUELA
Tel. 00 58 / 212 / 633 36 30 or
Tel. 00 58 / 212 / 633 62 30
Fax 00 58 / 212 / 633 22 62 or
Fax 00 58 / 212 / 632 80 13
E-Mail: purchase@diekmann.com.ve

Vietnam:
CAP DO Industrial Equipment Co Ltd.,
113/8A Tran Van Du Str.
Ward 13, Tan Binh Dist.
Ho-Chi-Minh-City
Tel. 0084 / 8 / 38 10 45 33
Fax. 0084 / 8 / 38 10 84 27
E-Mail: capdo01@capdo.com.vn

RÖHM

General conditions of sale and delivery

§ 1 Quotation, Formation of Contract and Content of Contract

1. The present General Terms of Sale and Delivery apply exclusively. We do not recognise any terms and conditions that are contradictory or different from our own, unless we have explicitly given our written agreement to do so. Our Terms of Sale and Delivery will also apply if we effect delivery to the Purchaser without any reservation in full awareness of the contradictory or different nature of the terms of the Purchaser, as compared to our own Terms.
2. Our quotations are always subject to change without notice unless they have been explicitly described as binding. The contract will only materialise upon our written confirmation and in line with the content thereof and by way of performance/delivery on our part. If delivery/service is immediately provided without any confirmation, the invoice will also be deemed to be the order confirmation.
3. Our General Terms of Sale and Delivery will only apply to a business entity as defined in Section 14 BGB [German Civil Code].
4. Costs for the compilation of drawings for specific constructions will be borne by the Orderer if, for reasons for which we are not responsible, the quotation does not lead to an order placement.
5. All particulars regarding weights, dimensions, services and technical data that feature in our printed matter, catalogues, price lists or in other contract documents are only approximate, unless they have been explicitly described as binding.
6. We retain the right to amend the construction and form of the subject of contract, providing this does not involve unreasonable alterations for the Orderer.
7. The documentation comprises an assembly layout, piece list with details of the wearing and spare parts, as well as operational and maintenance instructions; this is always in the German language. Documentation is only in paper form or in digital form. For digital forms, the texts are provided in the formats .TXT, .RTF or .DOC; drawings and piece lists are in the .TIF format (grid format). Any documentation in excess thereof will be billed and is subject to particular arrangement.
8. For testing, when specific temperatures, times and other measurements or control values are to apply, the appropriate measurement methods must be specified prior to delivery and acknowledged by both Parties. Unless such values are so defined, our own measurement methods will apply.
9. Samples will only be delivered subject to a fee.
10. Assurances given, ancillary agreements and changes to the contract will require the written form to be operative. It will not be possible to waive this requirement.
11. An order placement will be deemed irrevocable unless the Deliverer has agreed in writing to cancel it.
12. For export transactions, delivery will be subject to the conditions specified on the order confirmation; in addition, the respectively current version of the international trade definitions most commonly used in international sales contracts (incoterms 1953) will apply as devised by the International Chamber of Commerce.
13. In addition to the General Terms of Delivery and Sale, compliance with our "product information" sheets, the technical data sheets as well as other product-specific publications will apply, each in their current version.

§ 2 Prices

1. Failing specific written agreement, prices apply as in the Federal Republic of Germany, free house plus the value added tax required by law. For export transactions, the item to be delivered is deemed sold "ex works", unless the contract stipulates otherwise about the type of sale. For single orders for a value of goods less than 100.00 € net, a handling fee of 10.00 € plus the value added tax required by law will be charged for domestic orders and 25,00 € net for abroad orders.
2. Please note that we only despatch the consignment at the request of the customer. Irrespective of this, the rulings laid down in Section 5 will apply.
3. We bill the prices that were valid when the contract was drawn up, based on the cost factors applicable at the time. Should these cost factors (particularly material, wages, energy etc.) alter during the period between the drawing up of contract and the agreed delivery time, we will be entitled to amend prices accordingly. For export transactions, the Deliverer will be entitled to cancel that part of the order that has not yet been completed or to adjust prices appropriately if the currency in which the contract was drawn up has devalued.
4. With an „ex works" contract, the goods will be transported at the expense and risk of the Orderer. For all consignments, the respectively current version of the provisions of incoterms 1953 will apply to the insurance and bearing of risk.
5. For parts/products that are produced in line with Purchaser requirements, we will notify the Purchaser of our production quantity. The Purchaser undertakes to take receipt of the quantity thus confirmed.
6. Over-deliveries and short-deliveries are admissible up to 5%; for special tooling up to 10% is admissible, at least, however, 2 (two) pieces. The respective delivery will be billed.

§ 3 Modalities of Payment

1. Failing specific arrangements, payment is due without deduction and without charges within 10 days of the date of invoice - even for delivery instalments.
2. We are not bound to accept cheques or bills. In the event cheques or bills are accepted subject to prior arrangement in individual circumstances, this will only be as conditional payment, taking due account of discount charges and collection fees that are to be paid immediately in cash by the Customer. The ultimate credit entry of bills of exchange and cheques will be after their redemption. The acceptance of cheques or bills will be without prejudice for subsequent commitments to payment. We will not be liable for the punctual presentation, protest, notification and return of a bill in the event it is not honoured.
3. Any overshooting of the payment deadline will incur interest to the amount of the banks' borrowing costs, at least, however 8% in excess of the respective basic interest rate of the European Central Bank.
4. If a bill or a cheque is not honoured on time or if a deadline for payment is overreached, all receivables still outstanding, including those that are deferred and those for which bills or cheques have been given, will become due for immediate payment.
5. The Purchaser will only be entitled to offset if the counterclaims he asserts have been established by declaratory judgment, if they are undisputed or have been acknowledged by us. The Purchaser will be authorized to exercise a right of retention to the extent his counterclaim is derived from the same contractual relations.
6. For export transactions, payments will be paid subject to the modalities of payment contracted.
7. Costs of payment transactions, particularly bank charges of foreign payment transfers to us, are in principle for debits of the client.

§ 4 Delivery Period

1. The delivery period we specify begins to run providing all technical issues have been fully clarified. The delivery deadlines we give are in principle not binding and only constitute a probable delivery time.
2. The compliance with our commitment to deliver depends on the Purchaser having punctually and properly fulfilled his commitments, particularly his commitment to comply with the contracted terms of payment. The right to plea non-performance of contract will be retained.
This right will also be derived from commitments that have not been satisfied in full from previous deliveries.
3. The period of delivery commences upon the despatch of the order confirmation, yet not before the Orderer has provided the documents, permits, clearance papers etc. to be procured and not before the agreed deposit has been received.
4. If a fixed delivery date has been arranged, the Deliverer will effect delivery on time. Compliance with the delivery period will be deemed given if the item to be delivered has left the works or the readiness for despatch has been notified before the expiry of said delivery period, subject to timely and accurate delivery from our own suppliers. If the Orderer amends parts of the consignment to be delivered, the delivery period will run anew upon confirmation of said amendment.
5. Force majeure, war, uprising, strike, lock-out or measures enforced by the authorities for whatever reason that impede delivery, as well as a lack of raw materials, means of transport and theft – even with our own suppliers – will release the Deliverer from his commitment to deliver within the specified period of time. The Orderer will be notified immediately of the occurrence of the hindrance and of the likely repercussions.
6. It is admissible to effect delivery prior to the expiry of the specified delivery period and to deliver in appropriate instalments.
7. Compliance with the delivery period depends on the fulfilment of all contractual duties of the Orderer.
8. In the event of delivery delays or of the impossibility of delivery, the provisions of Section 10 will apply.

§ 5 Transfer of Risk and Taking Receipt

1. Risk will pass to the Orderer at the latest with the despatch of the consignment, even if delivery is to be in instalments or if we still have other services to provide, e.g. despatch costs or transport and delivery as well as installation.
2. At the request and at the expense of the Orderer, we will ensure insurance cover of the consignment to be delivered for theft, breakage and damages from transportation, fire and water and for other insurable risks.
3. If despatch is delayed for reasons for which the Orderer is responsible, the risk will pass to the Orderer as from the date of readiness for despatch; nevertheless, we undertake to ensure insurance cover at the request and expense of the Orderer as called for by the Orderer.
4. Even if the delivered items feature insignificant defects, the Orderer will take receipt thereof irrespective of the rights laid down in Section 8.

§ 6 Default of Acceptance, Call-off Orders

1. If the Orderer fails to take receipt of the items contracted on time, we will be entitled to set the Orderer a subsequent period of grace after which we will be entitled to dispose of the items otherwise and supply the Orderer subject to a subsequently lengthened delivery period. Irrespective of this, we will be entitled to withdraw from the contract as defined in Section 326 BGB [German Civil Code] and to call for compensation for damages owing to non-performance. In the event we call for compensation for non-performance, we will be able to claim compensation of 25% of the agreed price plus value added tax without having to provide evidence. We retain the right to assert actual damages of a greater dimension.
2. Orders, which we confirm for call-off must be accepted within one year of the date of order placement at the latest - unless otherwise arranged. The same will apply to fixed reservations or to permanent "call-off statuses. Section 6.1 will apply accordingly in the event the goods are not called off.

§ 7 Retention of Title

1. The items for delivery (the goods subject to the retention of title) will remain our property until all claims to which we are entitled from the Purchaser from the business relations have been satisfied in full. Where the value of all security interests to which we are entitled against the Purchaser exceeds all secured claims by more than 10%, we will release some of the security interests as appropriate at the request of the Purchaser.
2. During the period in which title to the goods is retained, the Purchaser is not allowed to pledge or assign the goods as security and is only permitted to resell to resellers in normal business transactions and only providing the reseller receives payment from its own customer or subjects the customer's ownership of the item to the full satisfaction of the customer's commitments to payment.
3. In the event of attachment, seizure or any other disposition or third-party intervention in respect of the goods, the Purchaser will notify us immediately so that we can file action subject to Section 771 ZPO [German Code of Civil Procedure]. If the third party is not able to reimburse us for the court and out-of-court costs of legal action pursuant to Section 771 ZPO, the Purchaser will be liable for the loss we thus incur.
4. The Purchaser undertakes to treat the item purchased with care. In particular, the Purchaser undertakes at his own expense to ensure it is adequately insured at reinstatement value against damages from fire, water and theft. Should maintenance and inspection work be required, the Purchaser will have this carried out in good time at his own expense.
5. In the event of breaches of duty on the part of the Purchaser, particularly with default in payment, we will be entitled to cancel the contract and to take back the goods; the Purchaser undertakes to surrender the goods. If we take back the goods and/or assert the retention of title, this does not mean we are cancelling the contract, unless we have explicitly declared as much.

General conditions of sale and delivery

6. If the Purchaser has resold the item purchased in regular business transactions, the Purchaser herewith now assigns to us all claims to payment in the amount of the final invoice amount (including value added tax), such as due to the Purchaser from the resale to his customer or a third party, irrespective of whether the item purchased has been resold without or after further reworking. The Purchaser remains authorized to collect this payment, even after assignment. Our own authority to collect payment ourselves will not be affected hereby. However we undertake not to collect payment providing the Purchaser satisfies his own commitments to payment from the proceeds collected, does not default in payment and in particular providing the initiation of insolvency proceedings is not petitioned or payments cease to be made. Should this, however, be the case, we will be able to demand that the Purchaser provides us with details of the assigned payments and their debtors as well as all information necessary to collect payment, that he hands over the relevant documentation to us and notifies the debtors (third parties) of the assignment.
7. The processing or reworking of the item purchased by the Purchaser will always be carried out on our behalf. If the item purchased is processed with other items not belonging to us, we will acquire co-ownership to the new item to the value of the item purchased (final invoice amount including value added tax) in relation to the other processed items at the time of reworking. The same will apply to the thus newly created items as for the items delivered subject to retention of title.
8. If the item purchased is processed with other items not belonging to us, we will acquire co-ownership to the new item to the value of the item purchased (final invoice amount including value added tax) in relation to the other processed items at the time of reworking. If the intermixing is such that the Purchaser's item is to be deemed the main item, it is herewith agreed that the Purchaser will transfer co-ownership to us proportionately. The Purchaser will keep the property in which we hold exclusive ownership or co-ownership on our behalf.

§ 8 Quality Defects
We are liable for defects in quality as follows:
1. All parts or services will be remedied, at our discretion, free of charge or redelivered or provided again that are found to feature a quality defect during the statutory period of limitation - irrespective of service life - providing the origin thereof already existed at the time of the passing of risk.
2. Claims to quality defects will become statute-barred in 12 (twelve) months. The period of time commences with the passing of risk (Section 6).
3. The Purchaser will immediately file written objection to the quality defect with us.
4. In the event objections are filed, the Purchaser will be permitted to refrain from payment to an extent appropriate to the quality defects featured. The Purchaser will only be able to refrain from payment if an objection is asserted, the justification of which cannot be doubted. If the objection has been asserted unjustifiably, we will be entitled to call for the reimbursement of the expenses incurred by us.
5. Initially we will always be granted an opportunity to remedy a defect within an appropriate period of grace.
6. Should the remedy fail, the Purchaser – notwithstanding any claims to damages – will be able to cancel the contract or reduce remuneration. The Purchaser will only be able to call for the reimbursement of fruitless expenditure if the defect in question is attributable to our own wilful intent or gross carelessness for which we are responsible.
7. Claims to defects in quality are not given if the divergence from the agreed nature of the product is only minimal, if usability is only insignificantly impaired, in cases of natural depreciation or damages generated after passing of the risk as a result of faulty or negligent treatment, excessive exposure, unsuitable operating media or because of specific outer impact that was not to be expected given the contract, as well as in cases of non-reproducible software errors. If amendments or repair work is carried out improperly by the Purchaser or by third parties, there will be no claims to the defects resulting or the effects thereof. The same will apply to a lack of compliance with our instructions on handling and other instructions and if maintenance is not carried out properly
8. Claims of the Purchaser to a refund of the expenses incurred for the purpose of remedy, such as costs of transport, travel, labour and materials will be ruled out, when such expenses increase because the item delivered was brought to a destination other than the Purchaser's branch premises, unless said relocation is in accordance with the intended use of the item.
9. Legal claims to recourse against us on the part of the Purchaser will only be given if the Purchaser has entered into no agreement with his customer in excess of those claims to defects regulated by the law.
10. Claims to compensation for damages will be governed by Section 9. Any farther-reaching claims to quality defects or others than those governed in this Section or in Section 9 will be ruled out.

§ 9 Industrial Property Rights and Copyrights, Defects of Title
Unless otherwise agreed, we undertake to only effect delivery free from proprietary rights and third party copyrights (referred to in the following as industrial property rights) in the country of the delivery destination. In the event a third party files justified claims against the Purchaser for a breach of industrial property rights derived from deliveries we effected that are being used as contracted, we will be liable towards the Purchaser for the period of time specified in Section 8.2 as follows:
1. At our discretion and at our own expense, we will either procure a licence for the deliveries in question, alter them so that there is no breach of industrial property rights or we will provide a substitute. Should this not prove possible at appropriate conditions, the Purchaser will be entitled to the rights of cancellation or reduction as laid down by the law. The Purchaser will only be able to call for the reimbursement of fruitless expenditure if we are to blame for wilful intent or gross negligence. Our commitment to provide compensation for damages is governed by Section 10.
2. The above commitments will only be given if the Purchaser has given us immediate, written notification of the claims asserted by the third party, does not recognise any breach of rights and if we retain the right to initiate defence measures and negotiate a settlement. If the Purchaser ceases to use the item delivered in order to reduce damages or for other good cause, the Purchaser undertakes to inform the third party that this discontinuation of use does not embody any acknowledgement of a breach of industrial property rights.
3. Claims of the Purchaser will be ruled out if the Purchaser is responsible for the breach of industrial property rights.
4. Any claims of the Purchaser will also be ruled out if the breach of industrial property rights was derived from specific specifications of the Purchaser, from an application that we could not foresee or from the item delivered being altered by the Purchaser or used in combination with products that we have not delivered.
5. In the case of breaches of industrial property rights, the provisions of Sections 8.4, 8.5 and 8.9 will apply appropriately to the claims of the Purchaser governed by Section 13.
6. Any farther-reaching claims to defects of title of the Purchaser or claims other than those governed by the present Section 9 against us or our vicarious agents will be ruled out.

§ 10 Overall Liability
1. Claims of the Purchaser to compensation for damages – irrespective of the legal nature of the claim asserted – will be ruled out.
2. The exceptions are:
a) Damages due to the violation of major contractual duties (cardinal duties). However, in the case of simple negligence, liability for damages will be restricted to foreseeable, typically occurring damages.
b) Damages derived from injury to life and limb if we are responsibility for the breach of duty.
c) Damages attributable to wilfully intentional or negligent violations, said breach of duty on the part of our legal representatives or vicarious agents being of equal status to any breaches of duty on our part.
d) Claim to damages for impossibility or inability.
3. Any alteration of the onus of proof to the detriment of the Purchaser does not relate to the above provisions.
4. Liability subject to the Product Liability Act remains unaffected hereby.
5. Where liability for compensation is ruled out or restricted in our respect, this will also apply to the personal liability for damages of our employees, our trade representatives and our vicarious agents.

§ 11 Duties to Involvement of the Purchaser
1. The involvement of the Purchaser that has been agreed to explicitly or implicitly in the contract will be subject to no specific remuneration, unless otherwise explicitly agreed.
2. The Purchaser undertakes to inform us in good time of all facts, which indicate that stocks and products we have made available in the light of our notified production capacities cannot be used or not be used in full. Where stock remains, in the case of a premature change to his planning, the Purchaser will take over the remainder and any costs of destruction that might be incurred. This will also apply to products for which we have had to place orders for minimum quantities from our own suppliers, providing we previously advised the customer thereof.
3. The Purchaser guarantees that the products delivered by him for reworking are suitable for the purpose. We do not undertake to check the products delivered by the Purchaser for their quality and aptitude for reworking. In ongoing business relations and whenever an item for reworking has been initially checked, tested and released, the Purchaser undertakes to inform us in writing of each and every product amendment without actually being requested to do so. When items are being reworked, after every change in production conditions on his premises, in particularly when substituting tooling, machinery or introducing new production processes, the Purchaser also undertakes to examine the item to be processed by us for any divergence and alteration and to notify us in writing of any such divergence and alteration.
4. Instructions from our Purchaser, the selection of material or other specifications laid down by the Purchaser do not oblige us to check them for accuracy.
5. The Purchaser will hence check all instructions it issues as well as the quality of the material specified to us or made available to us for compliance with the law and technical regulations.
6. Should the Purchaser default in terms of its duties to provide or to become involved, we will be entitled to the rights stipulated by law.
7. In any case, goods may only be returned subject to the explicit consent of the Deliverer. Their return will be free-house and details of the order number and delivery date will be given as well as the original delivery packaging. The goods will be in their original condition, i.e. in an undamaged state. For the handling of a return, we charge 20% of the value of the goods, at least, however, 50.00 € plus value added tax. In individual circumstances, the Deliverer retains the right to charge the Orderer a higher sum based on evidence.

§ 12 Place of Performance and Jurisdiction/ Other
1. The place of performance and payment will be the registered office of our company in Sontheim/Brenz.
2. Exclusively the laws of the Federal Republic of Germany will govern the present contractual relations. The application of the United Nations Convention dated 11.04.80 on Contracts for the International Sale of Goods (CISG – "Wiener Kaufrecht") is ruled out.
3. For all disputes derived from contractual relations, if the Orderer is a registered businessperson, a legal entity under public law or a separate estate under public law, legal action will be filed with the court of law with jurisdiction for our registered office. We will also be entitled to file legal action at the location of the registered seat of the Orderer.
4. Should any one condition of our General Terms of Sale and Delivery be void for any reason whatsoever, the validity of the remaining provisions will not be affected hereby.
5. We will save your data in accordance with Section 23 BDSG [Federal Data Protection Act].

RÖHM GmbH

D–89565 Sontheim/Brenz

Revised: September 2013

"RÖHM – we´re here to serve you."

We offer real partnership.
We see this reflected in collaborative partnerships both with specialist dealers as well as directly with consumers. We offer sound advice, provide comprehensive support and do our utmost for you, so that you get exactly the right solution for meeting your targets safely and economically. And if there isn't a solution available yet, then we'll design it.

driven by technology

RÖHM GmbH
Heinrich-Röhm-Straße 50 | 89567 Sontheim/Brenz | Deutschland
Tel 0049 73 25 – 16-0 | Fax 0049 73 25 – 16-510
jawfinder@roehm.biz | www.jawfinder.biz

Id.-Nr. 1242344 / 0913 CM