Akkermans Industrial Engineering B.V. info@aiebv.com T +31 (0)165 - 224140

AUTOMATION TECHNOLOGY

EDITION 8

RÖHM
driven by technology

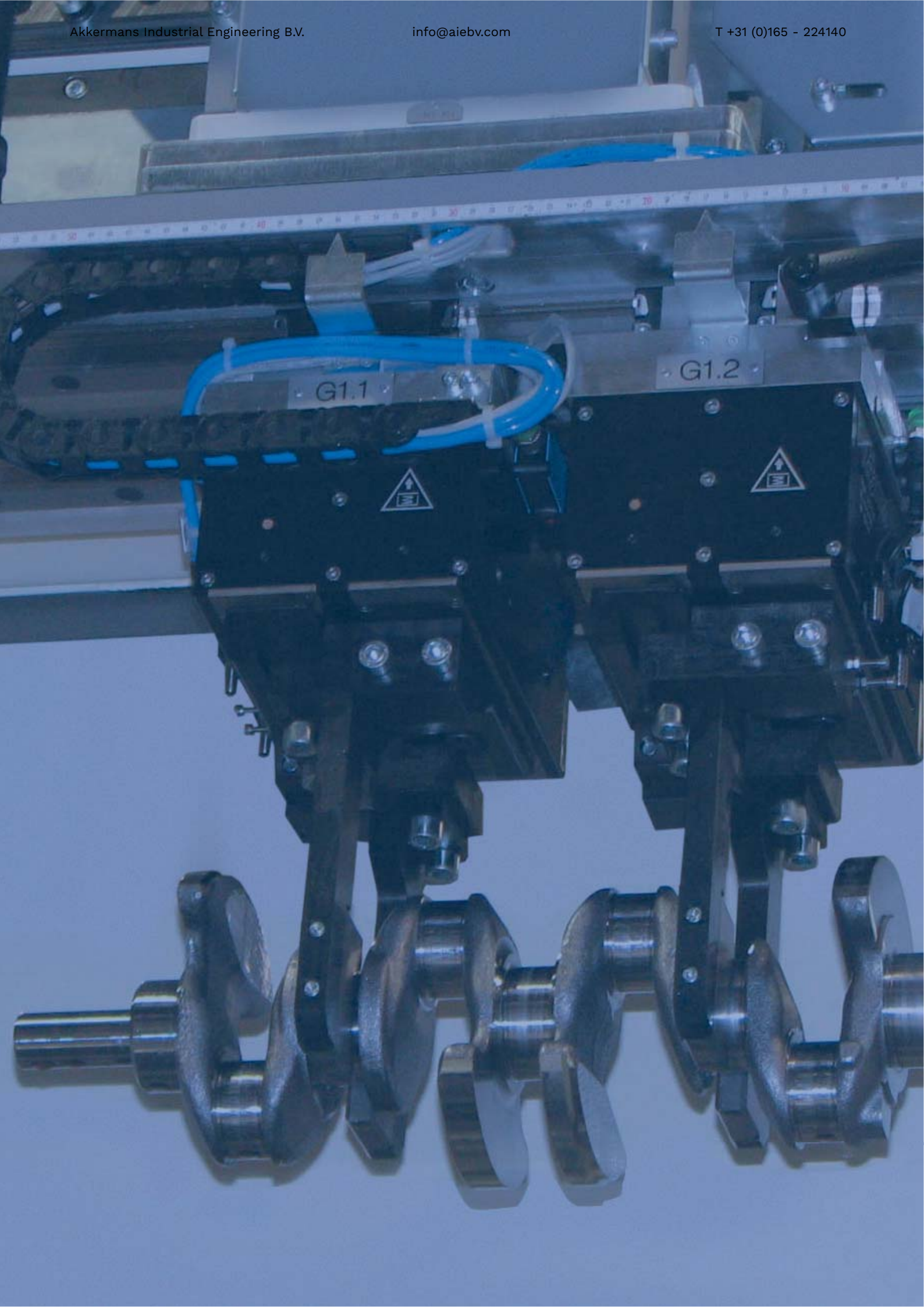
G1.1
G1.2

Table of contents

AUTOMATION TECHNOLOGY

2-jaw parallel gripper

RPP	5006
RPP-A	5028

3-jaw centric gripper

RZP	5046
RZP-A	5064

2-jaw long stroke gripper

RGP	5080
RGPO	5090

Application-specific grippers

RDPP - sealed parallel grippers	5098
RPR - compact long stroke grippers	5098

Synthetic grippers

RRMG	5102
RRMG-MRK	5103

Swivel units

RSP-Flex	5108

Zero point clamping system

EASYLOCK	5112

Operation guide

TYPE	RPP	RPP-A	RZP	RZP-A
	2-jaw parallel gripper		3-jaw centric gripper	
Gripping force	208 - 21900 N	240 - 3450 N	650 - 38000 N	700 - 16500 N
Stroke per jaw	2 - 45 mm	2 - 16 mm	3 - 35 mm	3 - 16 mm
Gripping type				
Clamping type				
Gripping force safety device				
Actuation	optional	optional		
Page	5006	5028	5046	5064

Operation guide

hydraulical actuated

external gripping

parallel gripping

pneumatical actuated

internal gripping

centric gripping

Operation guide

TYPE	RGP	RGPO	RPR	RRMG / RRMG-MRK
	2-jaw long stroke gripper			Synthetic gripper
Gripping force	630 - 2950 N	1250 - 3000 N	260 - 1100 N	80 - 150 N
Stroke per jaw	30 - 50 mm	60 - 100 mm	14 - 28 mm	2,6 - 4,3 mm
Gripping type				
Clamping type				
Gripping force safety device			-	Optional
Actuation		optional		
Page	5080	5090	5098	5102

gripping force safety device external gripping

gripping force safety device internal gripping

NOMENCLATURE

RPP	-A	- 100	-1	/ GA	/ V
RÖHM **P**arallel gripper **P**neumatic	**A =** Alternative jaw fixture by tongue and groove	**Sizes** 50 - 380	Jaw stroke variant **1** = long stroke **2** = short stroke	Optional: Spring safety **GA** = outside grip **GI** = inside grip	Optional: **V** = Viton FKM-sealing for temperatures up to 150 °C

Video RPP

2-JAW PARALLEL GRIPPER

Equipped with two parallel gripper fingers, RÖHM grippers are optimally suited for universal gripping of round and angular workpieces. Especially on robots or portals, the 2-jaw parallel grippers will convince with their compact design, low dead weight and high gripping force.

ADVANTAGES AT A GLANCE

- High gripping force with low dead weight and compact design
- Maximum flexibility thanks to versatile connection and fastening options
- Long service life and high reliability thanks to specially ground base jaws in proven T-slot guide

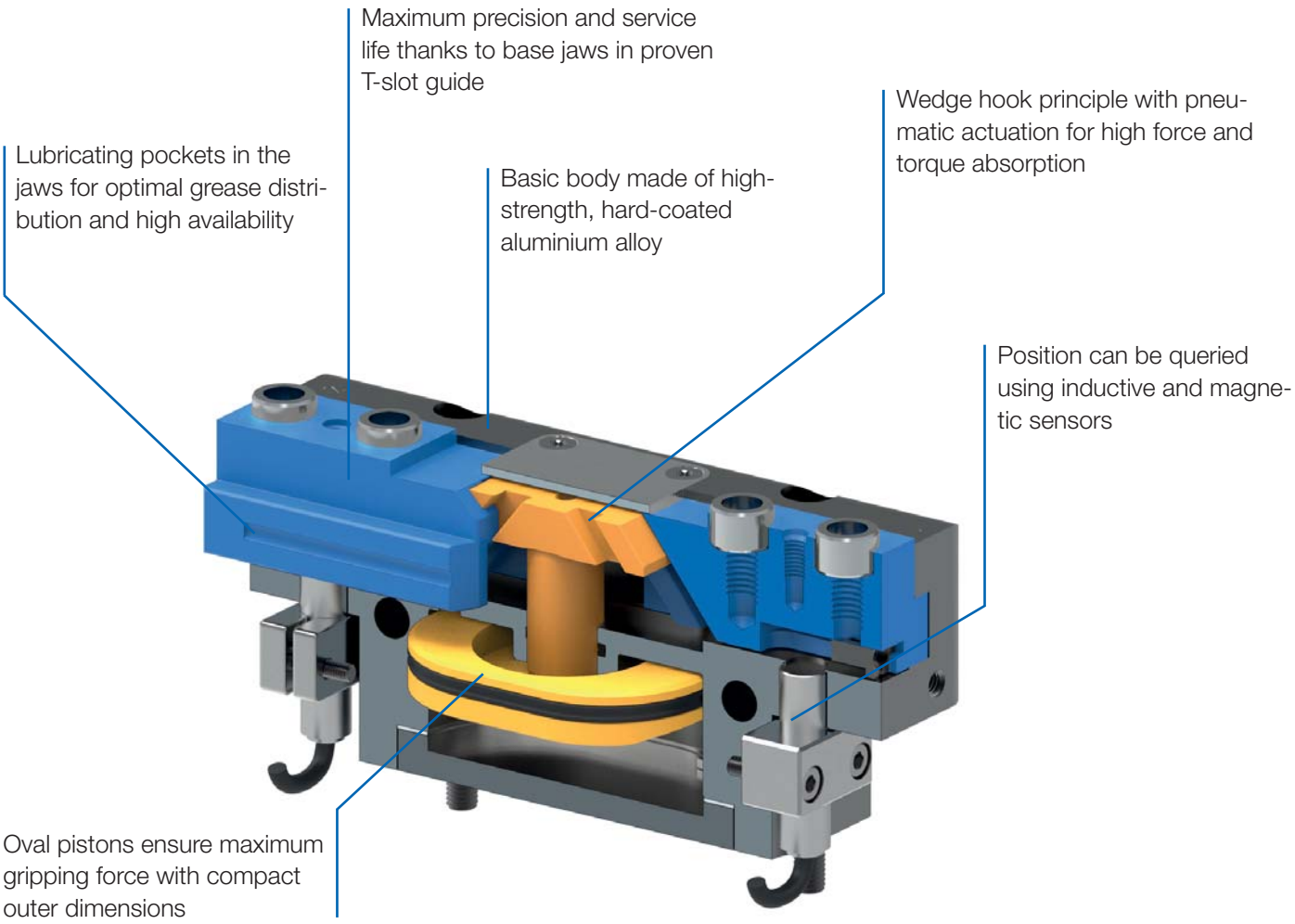

2-jaw parallel gripper

RPP-50

APPLICATION

Universal gripping of round and angular workpieces with two parallel gripper fingers for handling with robots or portals.

TYPE

Available from sizes 50 to 380, each in two stroke variants. Optionally with gripping force safety device and/or dirt cover.
Fastening of the gripper fingers via centering sleeves (included in the scope of delivery).

CUSTOMER BENEFITS

- High gripping force with low dead weight and compact design
- High torque support for using long gripper fingers thanks to elongated jaw guide
- Maximum flexibility thanks to versatile connection and fastening options
- Long service life and high reliability thanks to specially ground base jaws in proven T-slot guide

TECHNICAL FEATURES

- Centrically clamping in compact design made of high-strength, hard-coated aluminium alloy
- All functional parts made of hardened steel for maximum service life
- Wedge hook principle with pneumatic actuation (hydraulic actuation available on request)
- Position monitoring with inductive or magnetic position sensors
- Optionally available with FKM seals for higher temperatures up to 150°C (on request)
- Integrable purge air connection to prevent contamination

C40
RPP-50 - 2-jaw parallel gripper air operated

Item No.	170119	170120 ▲	170121	170122 ▲	170123 ▲	170124 ▲
Design	RPP-50-1	RPP-50-2	RPP-50-1/GA	RPP-50-2/GA	RPP-50-1/GI	RPP-50-2/GI
Gripping force at 6 bar N	208	398	242	462	264	505
Stroke per jaw mm	4	2	4	2	4	2
Gripping force maintained N	-	-	35	65	35	65
Recommended workpiece weight kg	0,7	1,45	0,7	1,45	0,7	1,45
Weight kg	0,19	0,19	0,23	0,23	0,23	0,23
Width mm	65	65	65	65	65	65
Height mm	31	31	47	47	47	47
Depth mm	30	30	30	30	30	30
Mx Nm	20	20	20	20	20	20
My Nm	25	25	25	25	25	25
Mz Nm	10	10	10	10	10	10
Fz N	500	500	500	500	500	500
Operating pressure min./max. without GA/GI bar	2-8	2-8	-	-	-	-
Operating pressure min./max. with GA/GI bar	-	-	4-7	4-7	4-7	4-7
Clamping time s	0,02	0,02	0,02	0,02	0,03	0,03
Opening time s	0,02	0,02	0,03	0,03	0,02	0,02
Air consumption per cycle cm^3	5	5	5	5	5	5
Max. allowable length of jaw mm	64	64	64	64	64	64

2-jaw parallel gripper

RPP-50

Max. load on gripper and jaw

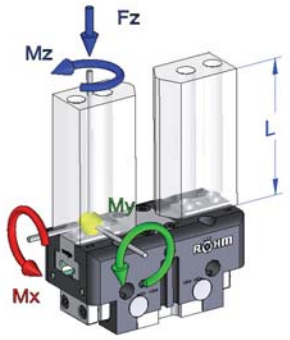

Clamping force diagram exterior gripping

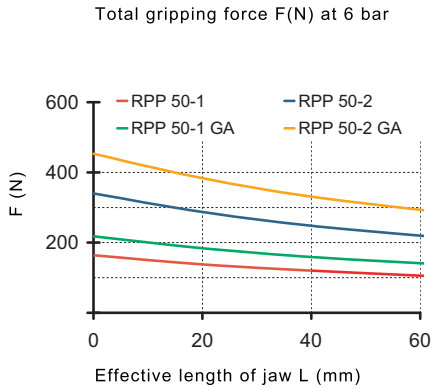

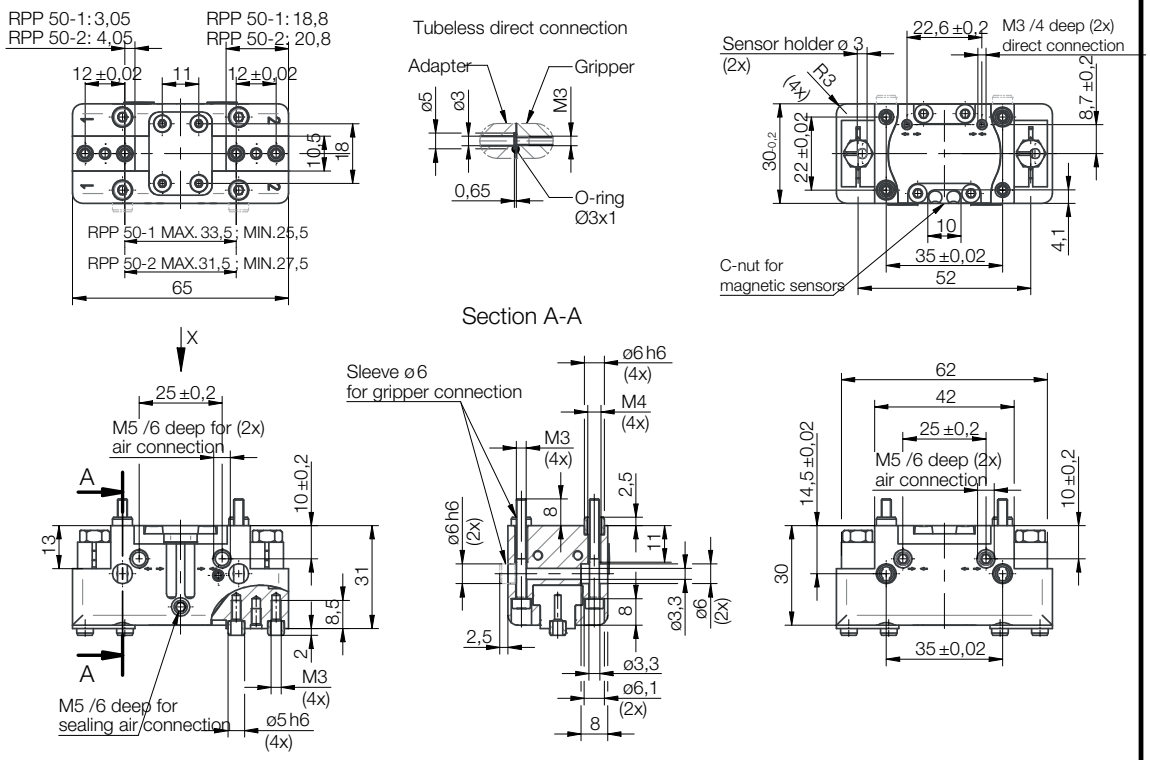

Typ GA/GI with gripping force safety device

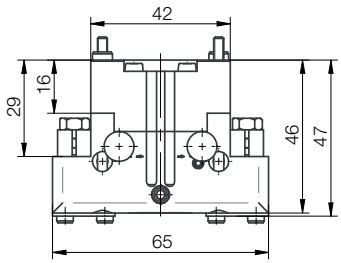

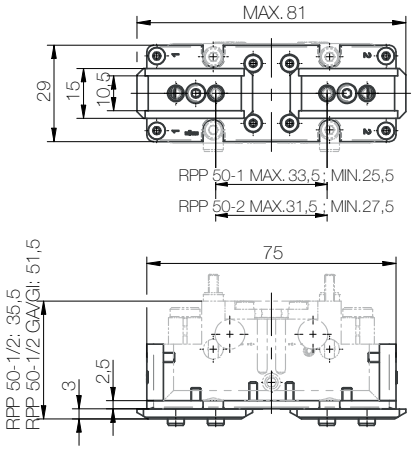

Parallel gripper RPP

2-jaw parallel gripper

RPP-64

APPLICATION

Universal gripping of round and angular workpieces with two parallel gripper fingers for handling with robots or portals.

TYPE

Available from sizes 50 to 380, each in two stroke variants. Optionally with gripping force safety device and/or dirt cover.
Fastening of the gripper fingers via centering sleeves (included in the scope of delivery).

CUSTOMER BENEFITS

- High gripping force with low dead weight and compact design
- High torque support for using long gripper fingers thanks to elongated jaw guide
- Maximum flexibility thanks to versatile connection and fastening options
- Long service life and high reliability thanks to specially ground base jaws in proven T-slot guide

TECHNICAL FEATURES

- Centrically clamping in compact design made of high-strength, hard-coated aluminium alloy
- All functional parts made of hardened steel for maximum service life
- Wedge hook principle with pneumatic actuation (hydraulic actuation available on request)
- Position monitoring with inductive or magnetic position sensors
- Optionally available with FKM seals for higher temperatures up to 150°C (on request)
- Integrable purge air connection to prevent contamination

C40
RPP-64 - 2-jaw parallel gripper air operated

Item No.	170001	170002 ▲	170003	170004 ▲	170005 ▲	170006 ▲
Design	RPP-64-1	RPP-64-2	RPP-64-1/GA	RPP-64-2/GA	RPP-64-1/GI	RPP-64-2/GI
Gripping force at 6 bar N	316	605	458	876	487	932
Stroke per jaw mm	6	3	6	3	6	3
Gripping force maintained N	-	-	100	200	100	200
Recommended workpiece weight kg	1,5	3	1,5	3	1,5	3
Weight kg	0,3	0,3	0,4	0,4	0,4	0,4
Width mm	76	76	76	76	76	76
Height mm	39	39	57	57	57	57
Depth mm	36	36	36	36	36	36
Mx Nm	40	40	40	40	40	40
My Nm	60	60	60	60	60	60
Mz Nm	40	40	40	40	40	40
Fz N	1100	1100	1100	1100	1100	1100
Operating pressure min./max. without GA/GI bar	2-8	2-8	-	-	-	-
Operating pressure min./max. with GA/GI bar	-	-	4-7	4-7	4-7	4-7
Clamping time s	0,03	0,03	0,02	0,02	0,04	0,04
Opening time s	0,03	0,03	0,04	0,04	0,02	0,02
Air consumption per cycle cm^3	10	10	10	10	10	10
Max. allowable length of jaw mm	90	85	85	80	85	80

2-jaw parallel gripper

RPP-64

Max. load on gripper and jaw

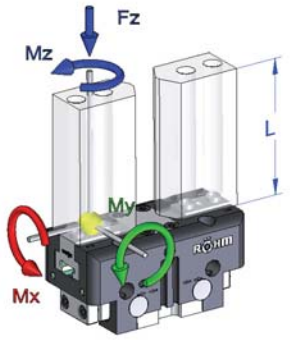

Clamping force diagram exterior gripping

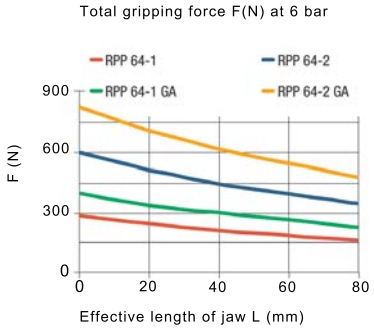

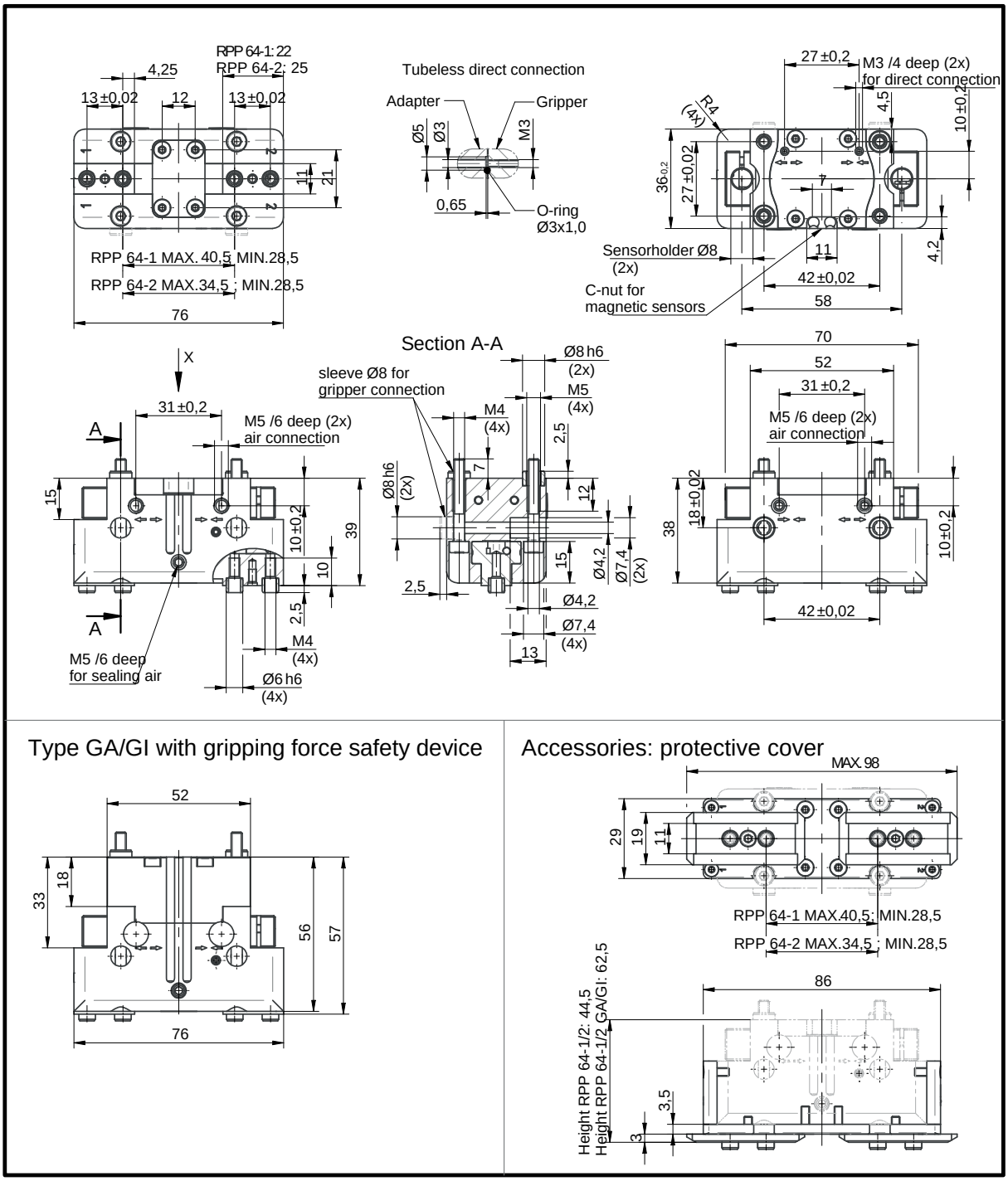

Type GA/GI with gripping force safety device

Accessories: protective cover

Parallel gripper RPP

2-jaw parallel gripper

RPP-80

APPLICATION

Universal gripping of round and angular workpieces with two parallel gripper fingers for handling with robots or portals.

TYPE

Available from sizes 50 to 380, each in two stroke variants. Optionally with gripping force safety device and/or dirt cover.
Fastening of the gripper fingers via centering sleeves (included in the scope of delivery).

CUSTOMER BENEFITS

- High gripping force with low dead weight and compact design
- High torque support for using long gripper fingers thanks to elongated jaw guide
- Maximum flexibility thanks to versatile connection and fastening options
- Long service life and high reliability thanks to specially ground base jaws in proven T-slot guide

TECHNICAL FEATURES

- Centrically clamping in compact design made of high-strength, hard-coated aluminium alloy
- All functional parts made of hardened steel for maximum service life
- Wedge hook principle with pneumatic actuation (hydraulic actuation available on request)
- Position monitoring with inductive or magnetic position sensors
- Optionally available with FKM seals for higher temperatures up to 150°C (on request)
- Integrable purge air connection to prevent contamination

C40
RPP-80 - 2-jaw parallel gripper air operated

Item No.	170007	170008 ▲	170009	170010 ▲	170011 ▲	170012 ▲
Design	RPP-80-1	RPP-80-2	RPP-80-1/GA	RPP-80-2/GA	RPP-80-1/GI	RPP-80-2/GI
Gripping force at 6 bar N	470	886	615	1156	657	1236
Stroke per jaw mm	8	4	8	4	8	4
Gripping force maintained N	-	-	160	300	160	300
Recommended workpiece weight kg	2,2	4,3	2,2	4,3	2,2	4,3
Weight kg	0,5	0,5	0,6	0,6	0,6	0,6
Width mm	96	96	96	96	96	96
Height mm	49	49	67	67	67	67
Depth mm	42	42	42	42	42	42
Mx Nm	60	60	60	60	60	60
My Nm	95	95	95	95	95	95
Mz Nm	55	55	55	55	55	55
Fz N	1500	1500	1500	1500	1500	1500
Operating pressure min./max. without GA/GI bar	2-8	2-8	-	-	-	-
Operating pressure min./max. with GA/GI bar	-	-	4-7	4-7	4-7	4-7
Clamping time s	0,04	0,04	0,03	0,03	0,05	0,05
Opening time s	0,04	0,04	0,05	0,05	0,03	0,03
Air consumption per cycle cm^3	21	21	21	21	21	21
Max. allowable length of jaw mm	110	105	105	100	105	100

2-jaw parallel gripper

RPP-80

Max. load on gripper and jaw

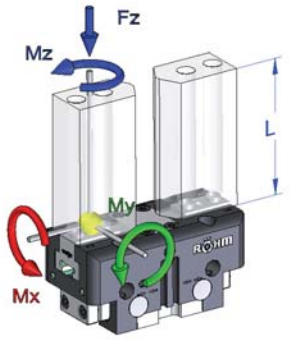

Clamping force diagram exterior gripping

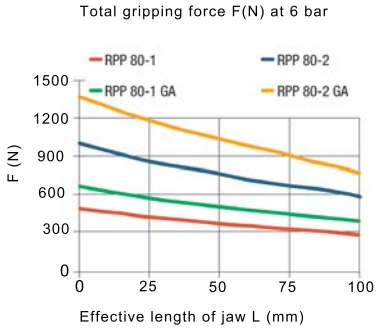

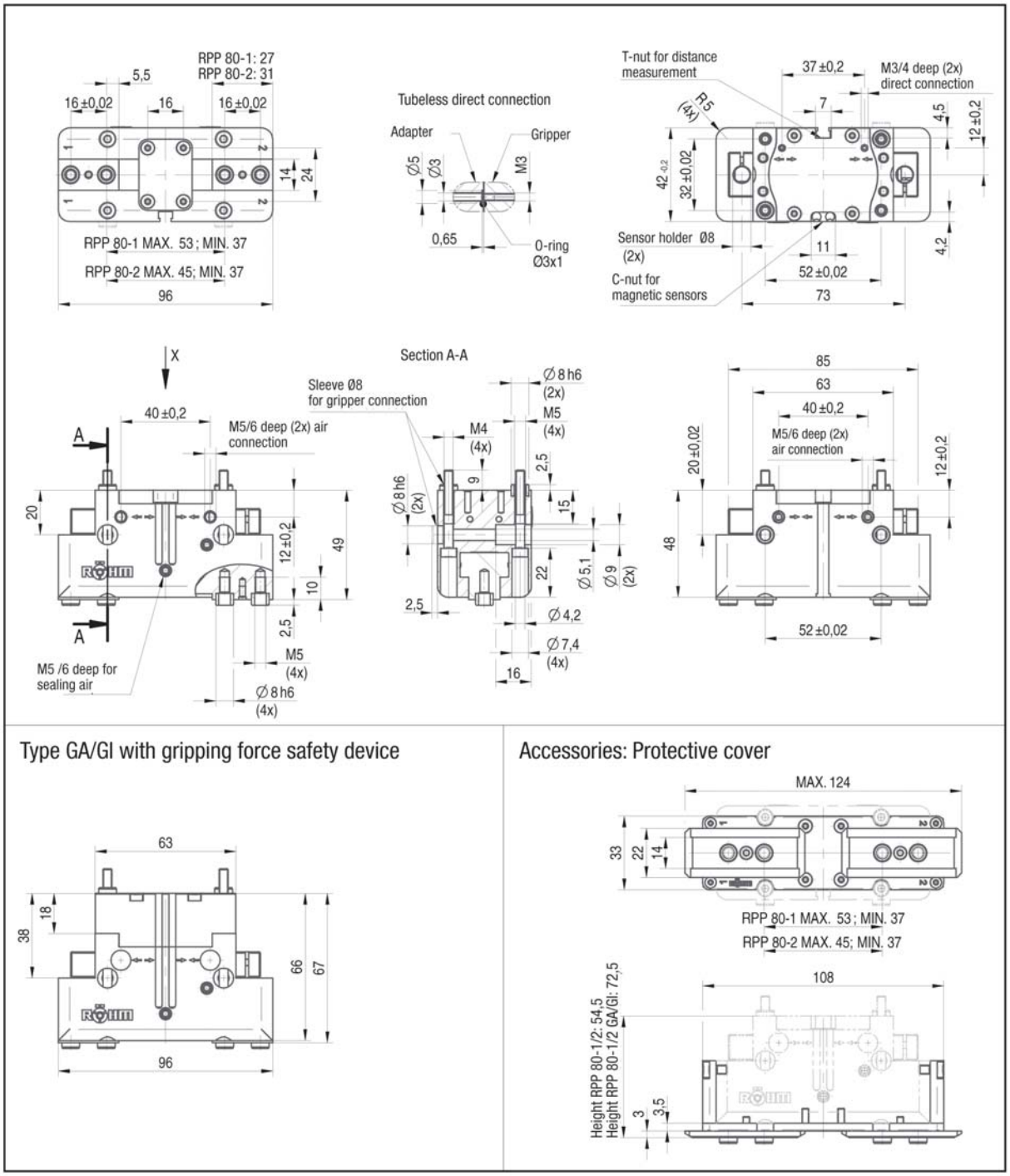

Parallel gripper RPP

2-jaw parallel gripper

RPP-100

APPLICATION

Universal gripping of round and angular workpieces with two parallel gripper fingers for handling with robots or portals.

TYPE

Available from sizes 50 to 380, each in two stroke variants. Optionally with gripping force safety device and/or dirt cover.
Fastening of the gripper fingers via centering sleeves (included in the scope of delivery).

CUSTOMER BENEFITS

- High gripping force with low dead weight and compact design
- High torque support for using long gripper fingers thanks to elongated jaw guide
- Maximum flexibility thanks to versatile connection and fastening options
- Long service life and high reliability thanks to specially ground base jaws in proven T-slot guide

TECHNICAL FEATURES

- Centrically clamping in compact design made of high-strength, hard-coated aluminium alloy
- All functional parts made of hardened steel for maximum service life
- Wedge hook principle with pneumatic actuation (hydraulic actuation available on request)
- Position monitoring with inductive or magnetic position sensors
- Optionally available with FKM seals for higher temperatures up to 150°C (on request)
- Integrable purge air connection to prevent contamination

C40
RPP-100 - 2-jaw parallel gripper air operated

Item No.	170013	170014	170015	170016	170018 ▲	170019 ▲
Design	RPP-100-1	RPP-100-2	RPP-100-1/GA	RPP-100-2/GA	RPP-100-1/GI	RPP-100-2/GI
Gripping force at 6 bar N	830	1570	981	1857	1044	1977
Stroke per jaw mm	10	5	10	5	10	5
Gripping force maintained N	-	-	260	500	260	450
Recommended workpiece weight kg	3,5	7	3,5	7	3,5	7
Weight kg	0,8	0,8	1	1	1	1
Width mm	120	120	120	120	120	120
Height mm	55	55	81	81	81	81
Depth mm	50	50	50	50	50	50
Mx Nm	80	80	80	80	80	80
My Nm	115	115	115	115	115	115
Mz Nm	70	70	70	70	70	70
Fz N	2000	2000	2000	2000	2000	2000
Operating pressure min./max. without GA/GI bar	2-8	2-8	-	-	-	-
Operating pressure min./max. with GA/GI bar	-	-	4-7	4-7	4-7	4-7
Clamping time s	0,07	0,07	0,05	0,05	0,09	0,09
Opening time s	0,07	0,07	0,09	0,09	0,05	0,05
Air consumption per cycle cm^3	40	40	40	40	40	40
Max. allowable length of jaw mm	145	135	135	125	135	125

2-jaw parallel gripper

RPP-100

Max. load on gripper and jaw

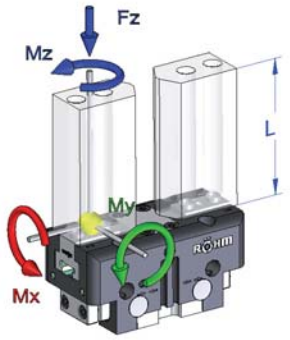

Clamping force diagram exterior gripping

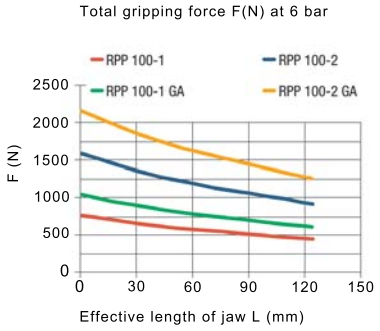

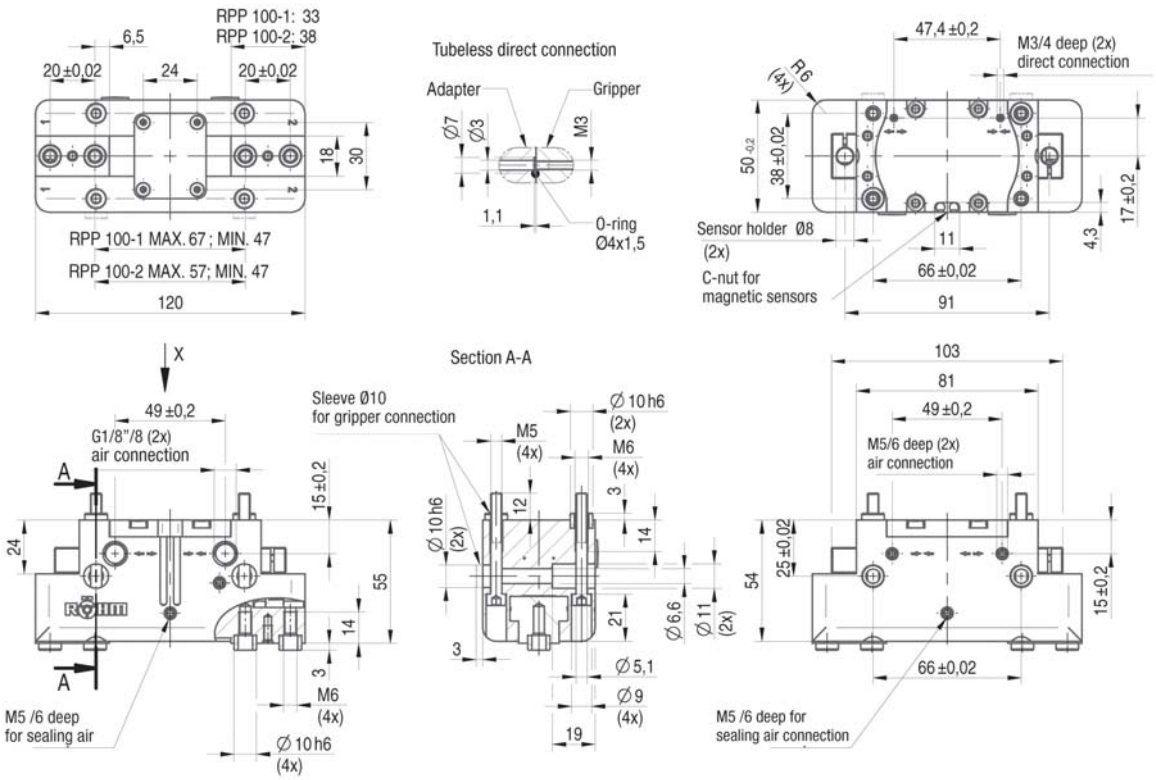

Type GA/GI with gripping force safety device

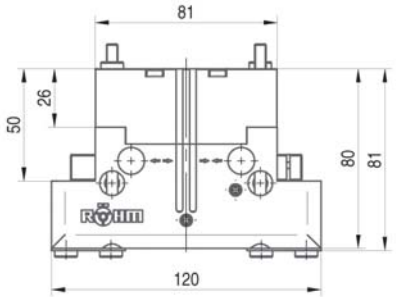

Accessories: Protective cover

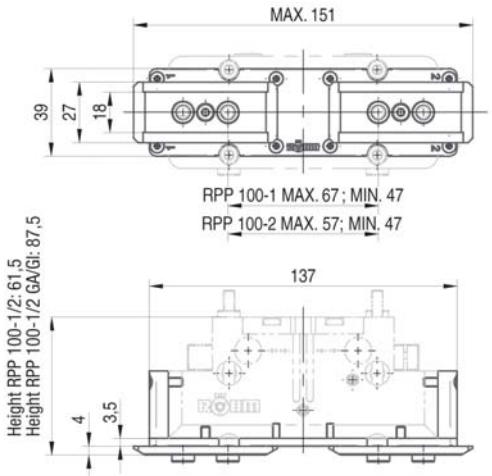

Parallel gripper RPP

2-jaw parallel gripper

RPP-125

APPLICATION

Universal gripping of round and angular workpieces with two parallel gripper fingers for handling with robots or portals.

TYPE

Available from sizes 50 to 380, each in two stroke variants. Optionally with gripping force safety device and/or dirt cover.
Fastening of the gripper fingers via centering sleeves (included in the scope of delivery).

CUSTOMER BENEFITS

- High gripping force with low dead weight and compact design
- High torque support for using long gripper fingers thanks to elongated jaw guide
- Maximum flexibility thanks to versatile connection and fastening options
- Long service life and high reliability thanks to specially ground base jaws in proven T-slot guide

TECHNICAL FEATURES

- Centrically clamping in compact design made of high-strength, hard-coated aluminium alloy
- All functional parts made of hardened steel for maximum service life
- Wedge hook principle with pneumatic actuation (hydraulic actuation available on request)
- Position monitoring with inductive or magnetic position sensors
- Optionally available with FKM seals for higher temperatures up to 150°C (on request)
- Integrable purge air connection to prevent contamination

C40
RPP-125 - 2-jaw parallel gripper air operated

Item No.	170020	170021	170022	170023 ▲	170025	170026
Design	RPP-125-1	RPP-125-2	RPP-125-1/GA	RPP-125-2/GA	RPP-125-1/GI	RPP-125-2/GI
Gripping force at 6 bar N	1243	2500	1568	3162	1625	3277
Stroke per jaw mm	13	6	13	6	13	6
Gripping force maintained N	-	-	350	750	350	750
Recommended workpiece weight kg	6,2	12,5	6,2	12,5	6,2	12,5
Weight kg	1,5	1,5	1,9	1,9	1,9	1,9
Width mm	151	151	151	151	151	151
Height mm	63	63	93	93	93	93
Depth mm	60	60	60	60	60	60
Mx Nm	120	120	120	120	120	120
My Nm	145	145	145	145	145	145
Mz Nm	100	100	100	100	100	100
Fz N	2800	2800	2800	2800	2800	2800
Operating pressure min./max. without GA/GI bar	2-8	2-8	-	-	-	-
Operating pressure min./max. with GA/GI bar	-	-	4-7	4-7	4-7	4-7
Clamping time s	0,1	0,1	0,08	0,08	0,12	0,12
Opening time s	0,1	0,1	0,12	0,12	0,08	0,08
Air consumption per cycle cm^3	80	80	80	80	80	80
Max. allowable length of jaw mm	180	170	170	160	170	160

2-jaw parallel gripper

RPP-125

Max. load on gripper and jaw

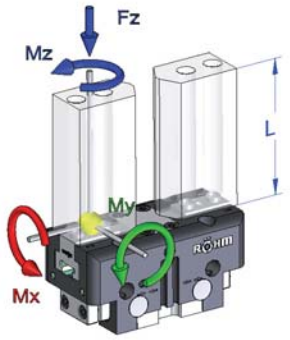

Clamping force diagram exterior gripping

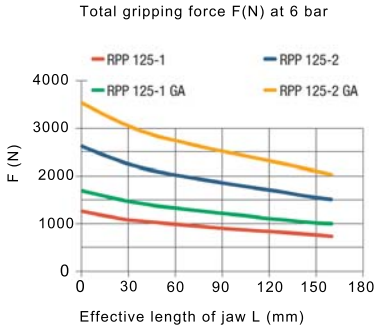

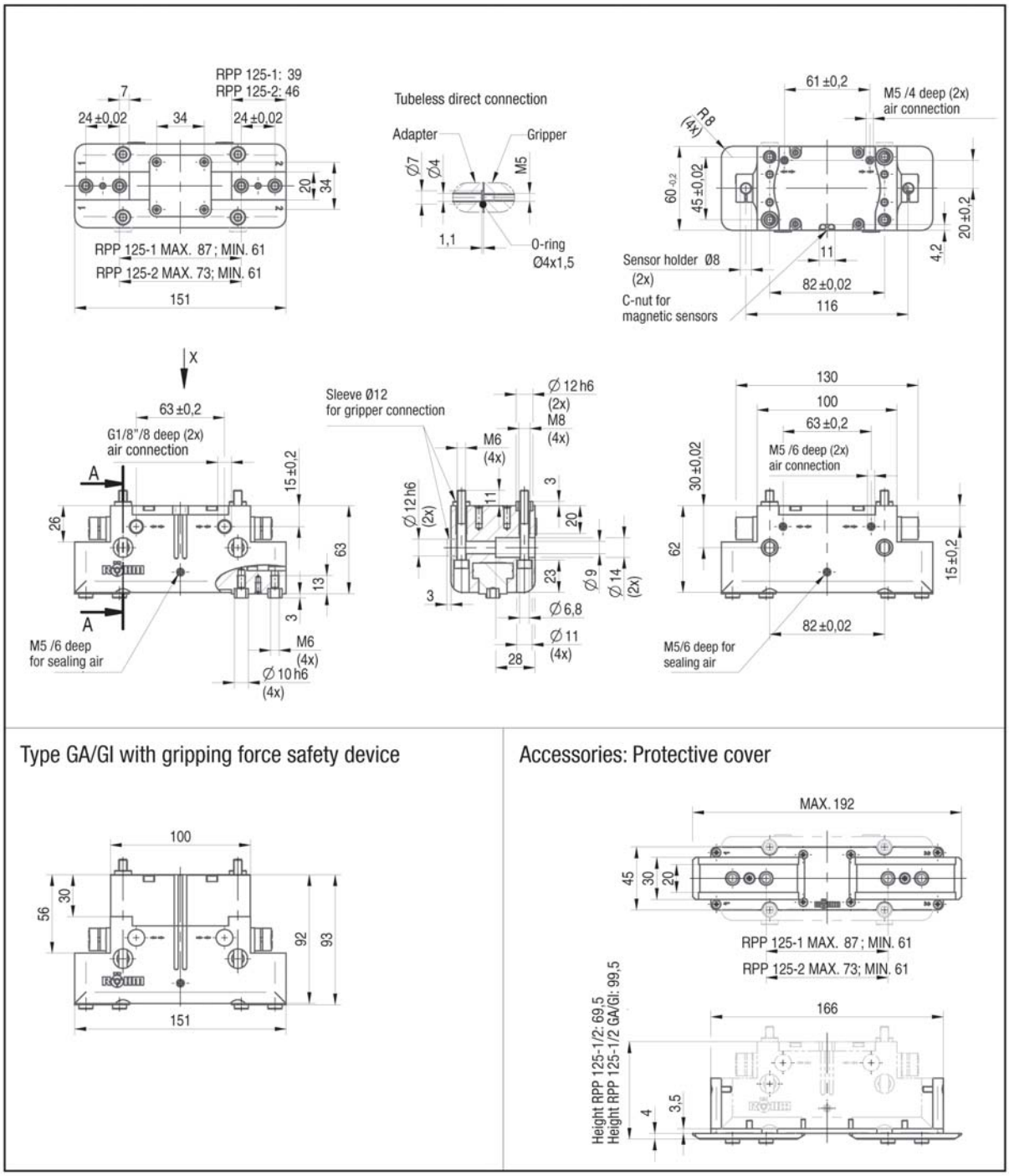

Parallel gripper RPP

2-jaw parallel gripper

RPP-160

APPLICATION

Universal gripping of round and angular workpieces with two parallel gripper fingers for handling with robots or portals.

TYPE

Available from sizes 50 to 380, each in two stroke variants. Optionally with gripping force safety device and/or dirt cover.
Fastening of the gripper fingers via centering sleeves (included in the scope of delivery).

CUSTOMER BENEFITS

- High gripping force with low dead weight and compact design
- High torque support for using long gripper fingers thanks to elongated jaw guide
- Maximum flexibility thanks to versatile connection and fastening options
- Long service life and high reliability thanks to specially ground base jaws in proven T-slot guide

TECHNICAL FEATURES

- Centrically clamping in compact design made of high-strength, hard-coated aluminium alloy
- All functional parts made of hardened steel for maximum service life
- Wedge hook principle with pneumatic actuation (hydraulic actuation available on request)
- Position monitoring with inductive or magnetic position sensors
- Optionally available with FKM seals for higher temperatures up to 150°C (on request)
- Integrable purge air connection to prevent contamination

C40
RPP-160 - 2-jaw parallel gripper air operated

Item No.	170029	170030	170031	170032	170033	170034
Design	RPP-160-1	RPP-160-2	RPP-160-1/GA	RPP-160-2/GA	RPP-160-1/GI	RPP-160-2/GI
Gripping force at 6 bar N	2000	3775	2555	4805	2664	5010
Stroke per jaw mm	16	8	16	8	16	8
Gripping force maintained N	-	-	550	1100	550	1100
Recommended workpiece weight kg	9	17	9	17	9	17
Weight kg	2,8	2,8	3,6	3,6	3,6	3,6
Width mm	192	192	192	192	192	192
Height mm	77	77	117	117	117	117
Depth mm	72	72	72	72	72	72
Mx Nm	170	170	170	170	170	170
My Nm	180	180	180	180	180	180
Mz Nm	130	130	130	130	130	130
Fz N	4300	4300	4300	4300	4300	4300
Operating pressure min./max. without GA/GI bar	2-8	2-8	-	-	-	-
Operating pressure min./max. with GA/GI bar	-	-	4-7	4-7	4-7	4-7
Clamping time s	0,15	0,15	0,25	0,25	0,12	0,12
Opening time s	0,15	0,15	0,25	0,25	0,12	0,12
Air consumption per cycle cm^3	160	160	160	160	160	160
Max. allowable length of jaw mm	220	210	210	200	210	200

2-jaw parallel gripper

RPP-160

Max. load on gripper and jaw

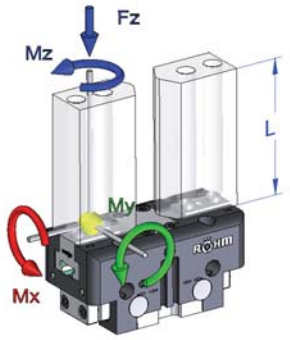

Clamping force diagram exterior gripping

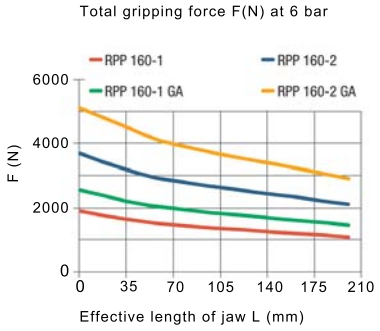

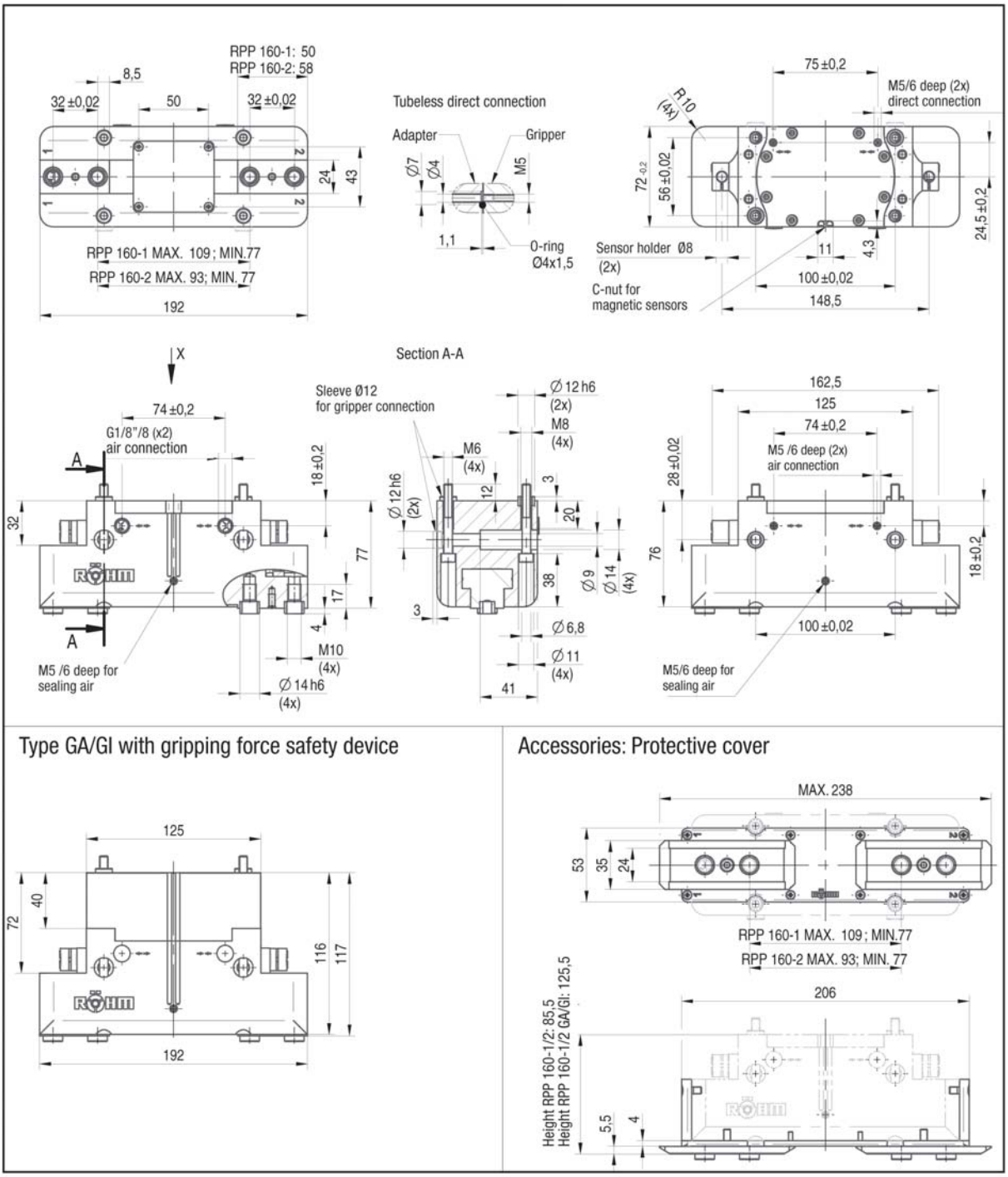

Parallel gripper RPP

2-jaw parallel gripper

RPP-200

APPLICATION

Universal gripping of round and angular workpieces with two parallel gripper fingers for handling with robots or portals.

TYPE

Available from sizes 50 to 380, each in two stroke variants. Optionally with gripping force safety device and/or dirt cover.
Fastening of the gripper fingers via centering sleeves (included in the scope of delivery).

CUSTOMER BENEFITS

- High gripping force with low dead weight and compact design
- High torque support for using long gripper fingers thanks to elongated jaw guide
- Maximum flexibility thanks to versatile connection and fastening options
- Long service life and high reliability thanks to specially ground base jaws in proven T-slot guide

TECHNICAL FEATURES

- Centrically clamping in compact design made of high-strength, hard-coated aluminium alloy
- All functional parts made of hardened steel for maximum service life
- Wedge hook principle with pneumatic actuation (hydraulic actuation available on request)
- Position monitoring with inductive or magnetic position sensors
- Optionally available with FKM seals for higher temperatures up to 150°C (on request)
- Integrable purge air connection to prevent contamination

C40
RPP-200 - 2-jaw parallel gripper air operated

Item No.	170035	170036	170037	170038▲	170039▲	170040▲
Design	RPP-200-1	RPP-200-2	RPP-200-1/GA	RPP-200-2/GA	RPP-200-1/GI	RPP-200-2/GI
Gripping force at 6 bar N	3080	5240	3940	6700	4090	6950
Stroke per jaw mm	25	14	25	14	25	14
Gripping force maintained N	-	-	900	1500	900	1500
Recommended workpiece weight kg	14	24	14	24	14	24
Weight kg	5,5	5,5	7,5	7,5	7,5	7,5
Width mm	234	234	234	234	234	234
Height mm	91	91	141	141	141	141
Depth mm	100	100	100	100	100	100
Mx Nm	180	180	180	180	180	180
My Nm	200	200	200	200	200	200
Mz Nm	140	140	140	140	140	140
Fz N	5000	5000	5000	5000	5000	5000
Operating pressure min./max. without GA/GI bar	2-8	2-8	-	-	-	-
Operating pressure min./max. with GA/GI bar	-	-	4-7	4-7	4-7	4-7
Clamping time s	0,35	0,35	0,3	0,3	0,6	0,6
Opening time s	0,35	0,35	0,6	0,6	0,3	0,3
Air consumption per cycle cm^3	390	390	390	390	390	390
Max. allowable length of jaw mm	280	240	240	200	240	200

2-jaw parallel gripper

RPP-200

Max. load on gripper and jaw

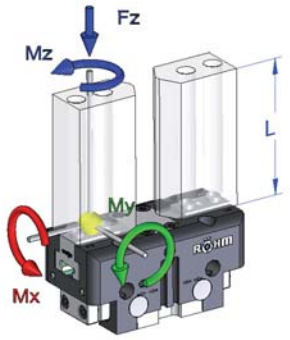

Clamping force diagram exterior gripping

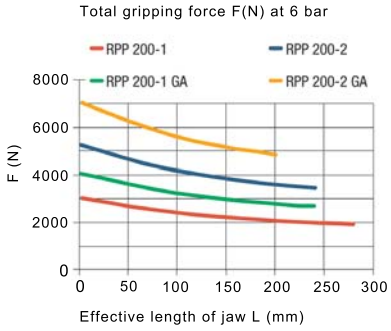

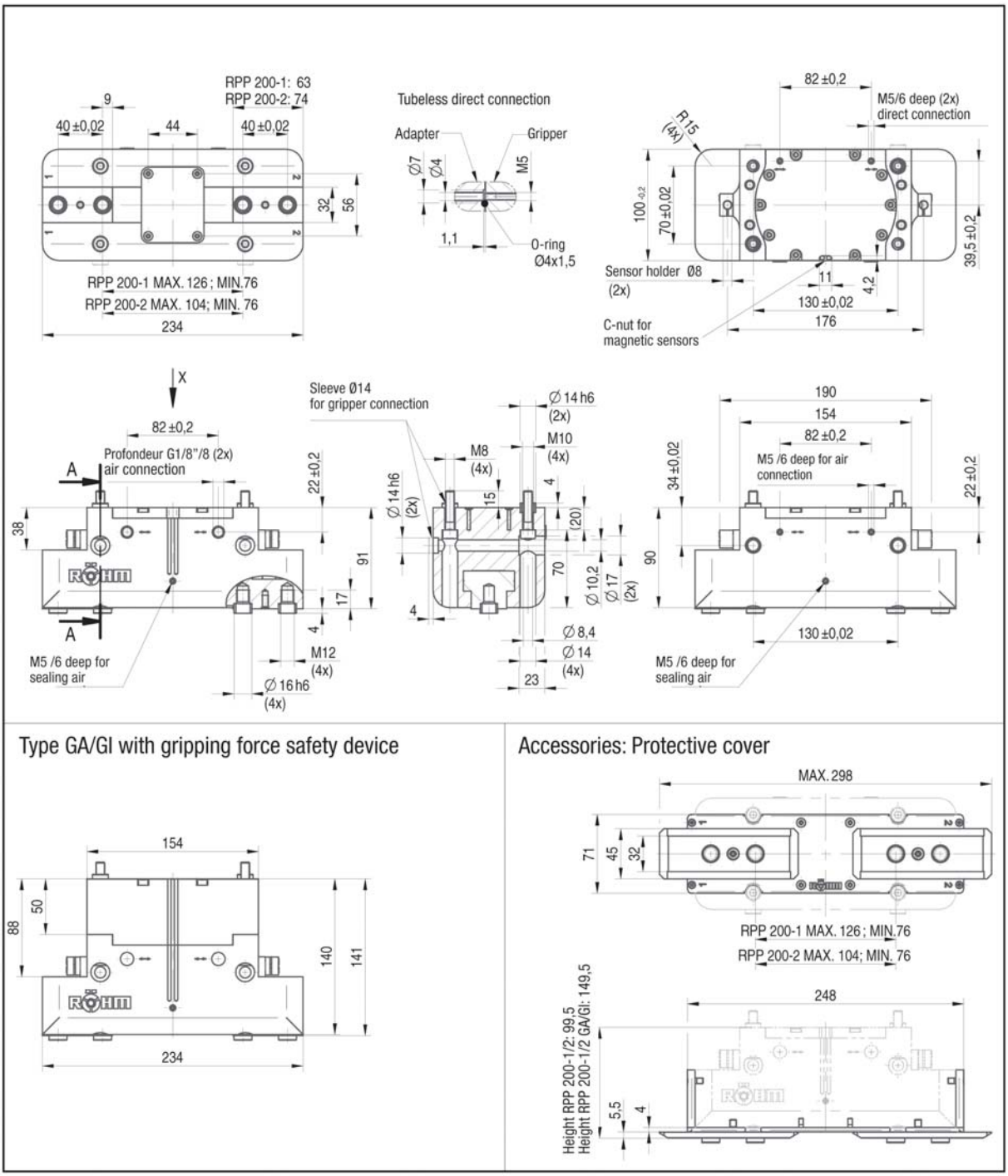

Parallel gripper RPP

2-jaw parallel gripper

RPP-240

APPLICATION

Universal gripping of round and angular workpieces with two parallel gripper fingers for handling with robots or portals.

TYPE

Available from sizes 50 to 380, each in two stroke variants. Optionally with gripping force safety device and/or dirt cover.
Fastening of the gripper fingers via centering sleeves (included in the scope of delivery).

CUSTOMER BENEFITS

- High gripping force with low dead weight and compact design
- High torque support for using long gripper fingers thanks to elongated jaw guide
- Maximum flexibility thanks to versatile connection and fastening options
- Long service life and high reliability thanks to specially ground base jaws in proven T-slot guide

TECHNICAL FEATURES

- Centrically clamping in compact design made of high-strength, hard-coated aluminium alloy
- All functional parts made of hardened steel for maximum service life
- Wedge hook principle with pneumatic actuation (hydraulic actuation available on request)
- Position monitoring with inductive or magnetic position sensors
- Optionally available with FKM seals for higher temperatures up to 150°C (on request)
- Integrable purge air connection to prevent contamination

C40
RPP-240 - 2-jaw parallel gripper air operated

Item No.	170100	170101	170102	170103	170104 ▲	170105 ▲
Design	RPP-240-1	RPP-240-2	RPP-240-1/GA	RPP-240-2/GA	RPP-240-1/GI	RPP-240-2/GI
Gripping force at 6 bar N	4309	7324	5256	8934	5526	9392
Stroke per jaw mm	30	17	30	17	30	17
Gripping force maintained N	-	-	1000	1600	1000	1600
Recommended workpiece weight kg	21	35	21	35	21	35
Weight kg	8,8	9,2	12	12	12	12
Width mm	270	270	270	270	270	270
Height mm	107	107	163,5	163,5	163,5	163,5
Depth mm	115	115	115	115	115	115
Mx Nm	260	260	260	260	260	260
My Nm	250	250	250	250	250	250
Mz Nm	160	160	160	160	160	160
Fz N	6200	6200	6200	6200	6200	6200
Operating pressure min./max. without GA/GI bar	2-8	2-8	-	-	-	-
Operating pressure min./max. with GA/GI bar	-	-	4-7	4-7	4-7	4-7
Clamping time s	0,45	0,45	0,35	0,35	0,65	0,65
Opening time s	0,45	0,45	0,65	0,65	0,35	0,35
Air consumption per cycle cm^3	650	650	650	650	650	650
Max. allowable length of jaw mm	320	280	280	240	280	240

2-jaw parallel gripper

RPP-240

Max. load on gripper and jaw

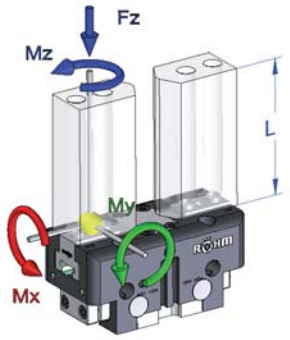

Clamping force diagram exterior gripping

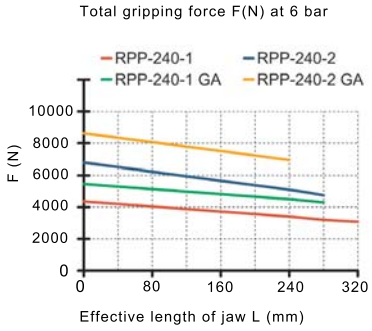

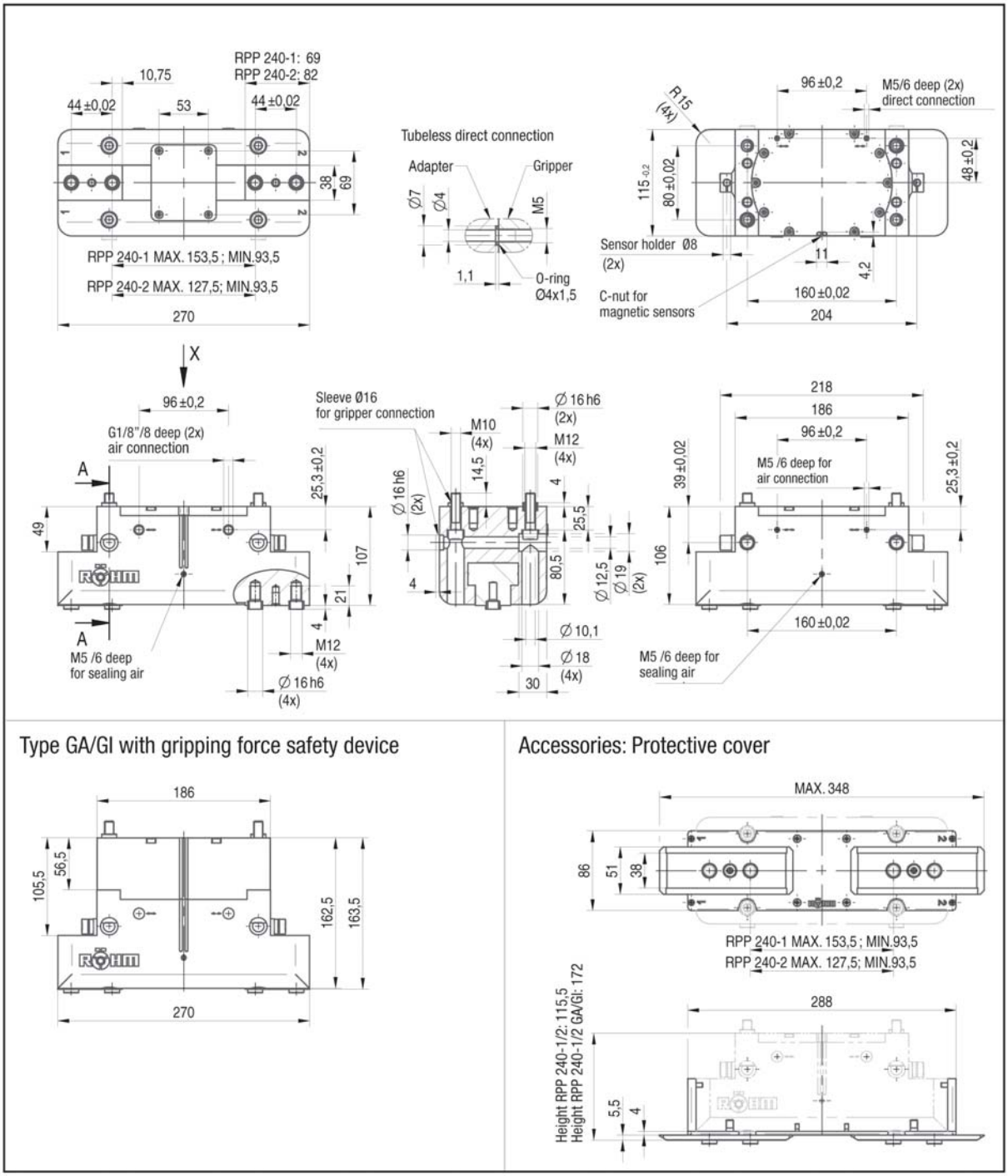

Parallel gripper RPP

2-jaw parallel gripper

RPP-300

APPLICATION

Universal gripping of round and angular workpieces with two parallel gripper fingers for handling with robots or portals.

TYPE

Available from sizes 50 to 380, each in two stroke variants. Optionally with gripping force safety device and/or dirt cover.
Fastening of the gripper fingers via centering sleeves (included in the scope of delivery).

CUSTOMER BENEFITS

- High gripping force with low dead weight and compact design
- High torque support for using long gripper fingers thanks to elongated jaw guide
- Maximum flexibility thanks to versatile connection and fastening options
- Long service life and high reliability thanks to specially ground base jaws in proven T-slot guide

TECHNICAL FEATURES

- Centrically clamping in compact design made of high-strength, hard-coated aluminium alloy
- All functional parts made of hardened steel for maximum service life
- Wedge hook principle with pneumatic actuation (hydraulic actuation available on request)
- Position monitoring with inductive or magnetic position sensors
- Optionally available with FKM seals for higher temperatures up to 150°C (on request)
- Integrable purge air connection to prevent contamination

C40
RPP-300 - 2-jaw parallel gripper air operated

Item No.	170041 ▲	170042	170043 ▲	170044 ▲	170045 ▲	170046 ▲
Design	RPP-300-1	RPP-300-2	RPP-300-1/GA	RPP-300-2/GA	RPP-300-1/GI	RPP-300-2/GI
Gripping force at 6 bar N	6400	11000	7590	12910	7860	13360
Stroke per jaw mm	35	20	35	20	35	20
Gripping force maintained N	-	-	1300	2200	1300	2200
Recommended workpiece weight kg	31	52	31	52	31	52
Weight kg	14	14	17	17	17	17
Width mm	320	320	320	320	320	320
Height mm	122	122	172	172	172	172
Depth mm	140	140	140	140	140	140
Mx Nm	400	400	400	400	400	400
My Nm	400	400	400	400	400	400
Mz Nm	250	250	250	250	250	250
Fz N	8000	8000	8000	8000	8000	8000
Operating pressure min./max. without GA/GI bar	2-8	2-8	-	-	-	-
Operating pressure min./max. with GA/GI bar	-	-	4-7	4-7	4-7	4-7
Clamping time s	0,5	0,5	0,4	0,4	0,7	0,7
Opening time s	0,5	0,5	0,7	0,7	0,4	0,4
Air consumption per cycle cm^3	1040	1040	1040	1040	1040	1040
Max. allowable length of jaw mm	350	300	300	250	300	250

2-jaw parallel gripper

RPP-300

Max. load on gripper and jaw

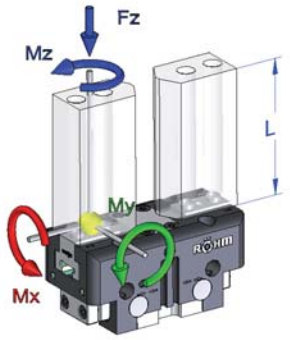

Clamping force diagram exterior gripping

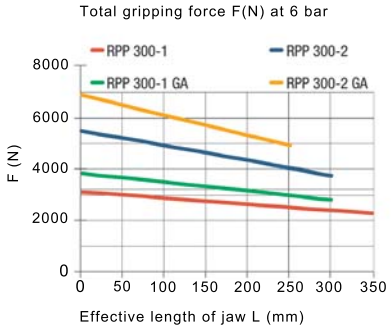

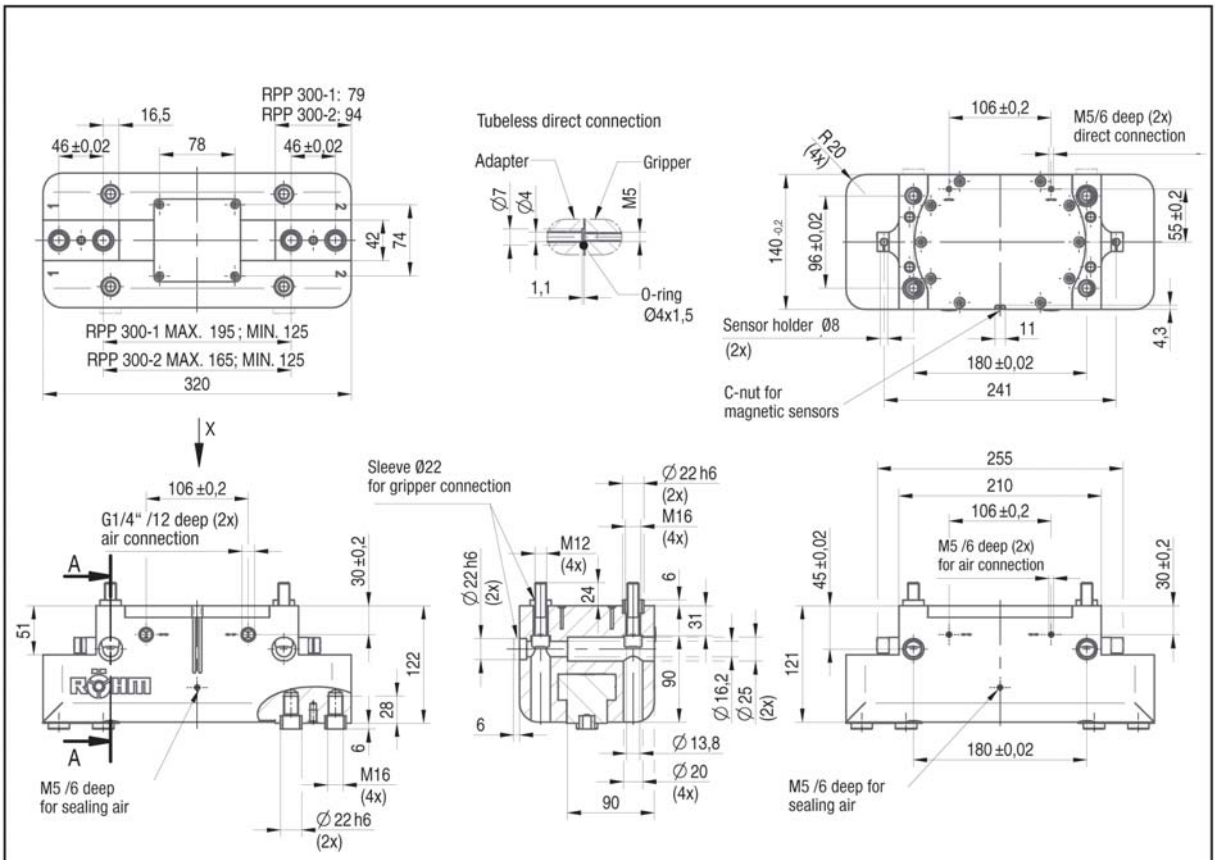

Type GA/GI with gripping force safety device

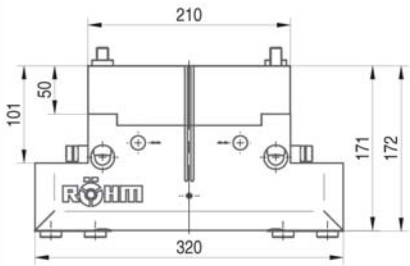

Accessories: Protective cover

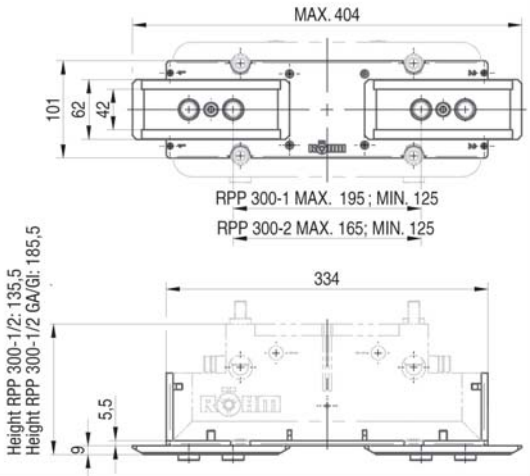

Parallel gripper RPP

2-jaw parallel gripper

RPP-380

APPLICATION

Universal gripping of round and angular workpieces with two parallel gripper fingers for handling with robots or portals.

TYPE

Available from sizes 50 to 380, each in two stroke variants. Optionally with gripping force safety device and/or dirt cover.
Fastening of the gripper fingers via centering sleeves (included in the scope of delivery).

CUSTOMER BENEFITS

- High gripping force with low dead weight and compact design
- High torque support for using long gripper fingers thanks to elongated jaw guide
- Maximum flexibility thanks to versatile connection and fastening options
- Long service life and high reliability thanks to specially ground base jaws in proven T-slot guide

TECHNICAL FEATURES

- Centrically clamping in compact design made of high-strength, hard-coated aluminium alloy
- All functional parts made of hardened steel for maximum service life
- Wedge hook principle with pneumatic actuation (hydraulic actuation available on request)
- Position monitoring with inductive or magnetic position sensors
- Optionally available with FKM seals for higher temperatures up to 150°C (on request)
- Integrable purge air connection to prevent contamination

C40
RPP-380 - 2-jaw parallel gripper air operated

Item No.	172113	172114	172115	172116	172117▲	172118▲
Design	RPP-380-1	RPP-380-2	RPP-380-1/GA	RPP-380-2/GA	RPP-380-1/GI	RPP-380-2/GI
Gripping force at 6 bar N	9620	16350	12470	21200	12900	21900
Stroke per jaw mm	45	26	45	26	45	26
Gripping force maintained N	-	-	2850	4850	2850	4850
Recommended workpiece weight kg	48	82	35,5	82	48	82
Weight kg	28	28	35,5	35,5	35,5	35,5
Width mm	310	410	410	410	410	410
Height mm	226,5	155	226,5	226,5	226,5	226,5
Depth mm	170	170	170	170	170	170
Mx Nm	560	560	560	560	560	560
My Nm	560	560	560	560	560	560
Mz Nm	370	370	370	370	370	370
Fz N	10000	10000	10000	10000	10000	10000
Operating pressure min./max. without GA/GI bar	2,5-8	2,5-8	-	-	-	-
Operating pressure min./max. with GA/GI bar	-	-	4-6,5	4-6,5	4-6,5	4-6,5
Clamping time s	0,6	0,6	0,45	0,45	0,8	0,8
Opening time s	0,6	0,6	0,8	0,8	0,5	0,5
Max. allowable length of jaw mm	400	350	350	300	350	300

2-jaw parallel gripper

RPP-380

Max. load on gripper and jaw

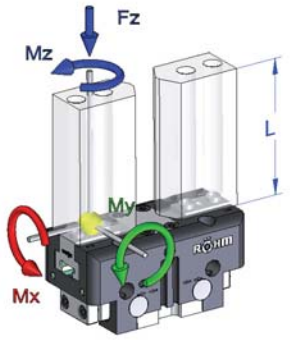

Clamping force diagram exterior gripping

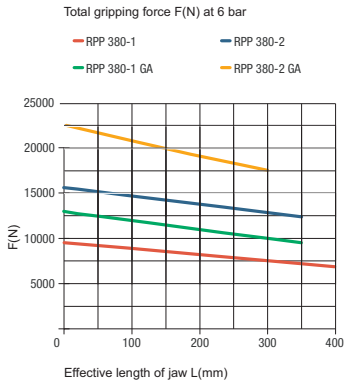

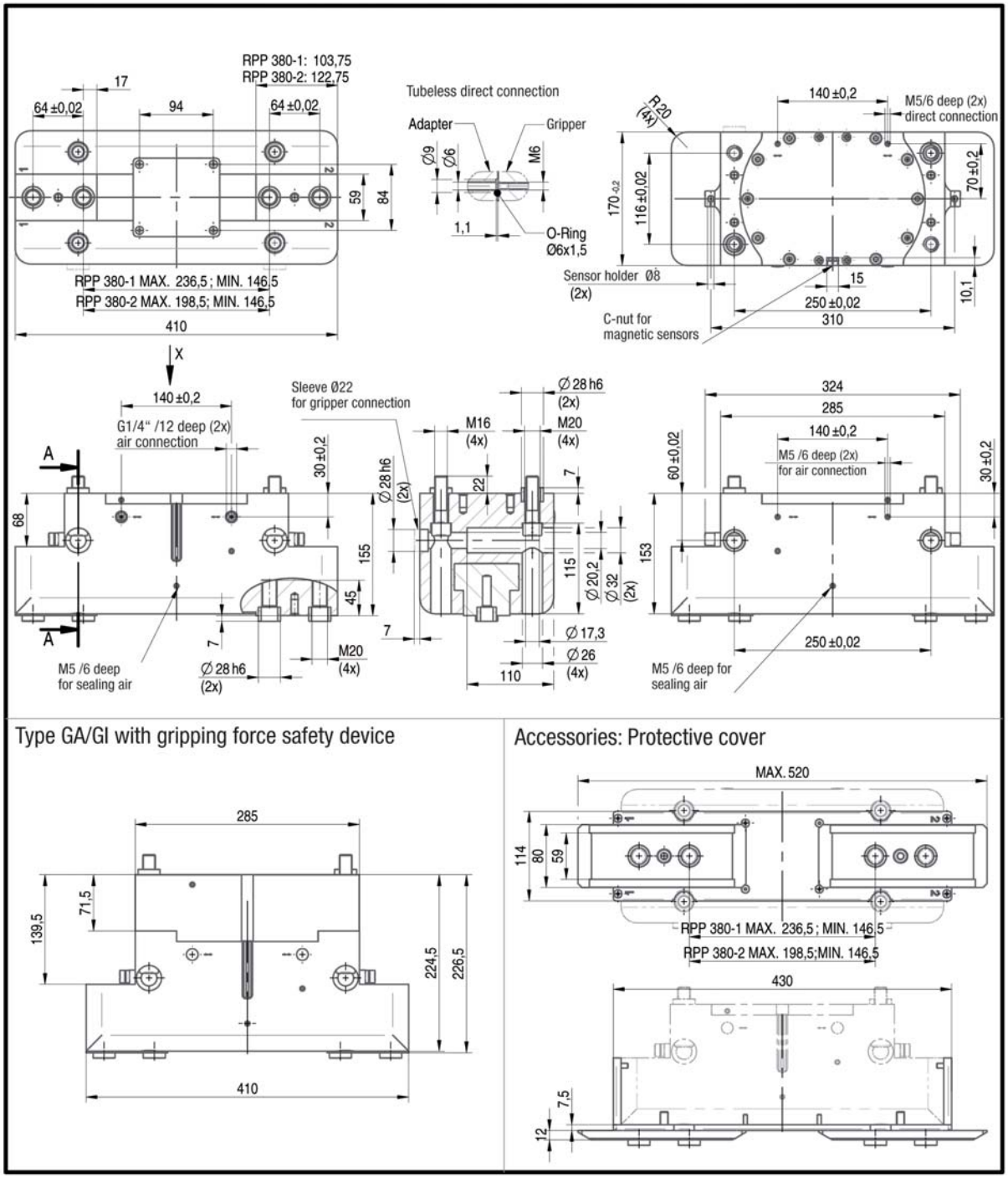

Parallel gripper RPP

Accessories RPP

Jaw blank - steel (including fixing screws)
2-jaw set

Item no.	Number of jaws	Design	For
170574	2	steel	RPP-50
170575 ▲	2	steel	RPP-64
170576	2	steel	RPP-80
170577 ▲	2	steel	RPP-100
170578 ▲	2	steel	RPP-125
170579 ▲	2	steel	RPP-160
170580 ▲	2	steel	RPP-200
170581 ▲	2	steel	RPP-240
170582 ▲	2	steel	RPP-300
170583 ▲	2	steel	RPP-380

Jaw blank - aluminium (including fixing screws)
2-jaw set

Item no.	Number of jaws	Design	For
170584 ▲	2	aluminium	RPP-50
170585	2	aluminium	RPP-64
170586	2	aluminium	RPP-80
170587 ▲	2	aluminium	RPP-100
170588 ▲	2	aluminium	RPP-125
170589 ▲	2	aluminium	RPP-160
170590 ▲	2	aluminium	RPP-200
170591 ▲	2	aluminium	RPP-240
170592 ▲	2	aluminium	RPP-300
170593 ▲	2	aluminium	RPP-380

Protective cover

Item no.	For
170540	RPP-64
170541	RPP-80
170542	RPP-100
170543	RPP-125
170544	RPP-160
170545	RPP-200
170546	RPP-240
170547	RPP-300
170594	RPP-50
170548	RPP-380

Compressed air connection - L-Plug connector

Item no.	Design	For
802539	L-Plug connector M5 - 6 mm	RPP-50 / RPP-64 / RPP-80
477025	L-Plug connector 1/8 - 6 mm	RPP-100 - RPP-240
477024 ▲	L-Plug connector 1/4 - 6 mm	RPP-300 / RPP-380

Pressure maintenance
for double acting gripper (G1/8)

Item no.
1078823

Proximity switch

Item no.	Size (diameter/ length)	Design	For
1149503	3x27	30 cm cable, plug M8x1-S49	RPP-50
229114	M8x1x30,5	5 m cable, open leads	RPP-64/-80/-100
389661	M8x1x46,5	3 m cable, open leads	RPP-125/-380

Magnetic field sensors

Item no.	Size (diameter/length)	Design	For
1231970	C-Nut	30 cm cable, plug M8x1-S49	RPP-50
1306268	C-Nut	2 m cable, open lead	RPP-64 to RPP-380

Accessories RPP

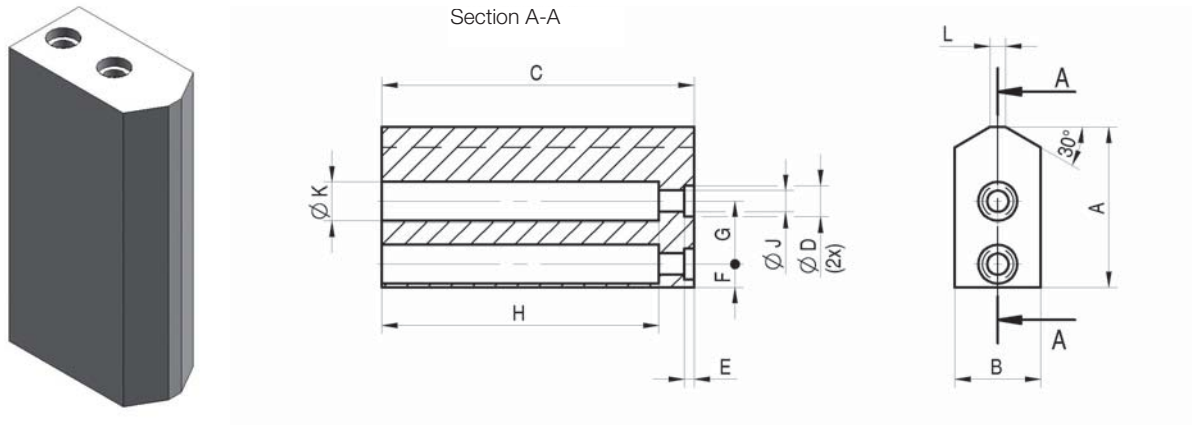

Jaw blank - steel (including fixing screws)

RPP / RZP	50	64	80	100	125	160	200	240	300
RPP - 2-jaw set	**170574**	**170575**	**170576**	**170577**	**170578**	**170579**	**170580**	**170581**	**170582**
RZP - 3-jaw set	**170596**	**170500**	**170502**	**170504**	**170506**	**170508**	**170510**	**170512**	**170514**
A	30	32	41	51	60	80	96	109	130
B	15	20	22	30	35	40	40	50	60
C	50	64	80	100	125	160	200	220	200
D +0,04/+0,02	5	6	8	10	10	14	16	16	22
E+0,2	2	2,5	2,5	3	3	4	4	4	6
F±0,1	5	5	6	7	9,5	10	15	15,5	20
G±0,1	12	13	16	20	24	32	40	44	46
H	45	57	71	91	115	146	181	204	177
J	3,4	4,5	5,5	6,6	6,6	11	13,5	13,5	17,5
K	6	8	10	11	11	18	20	20	26
L	2	3	4	5	6	8	13	10	16
Weight per jaw kg	0,15	0,25	0,45	1,0	1,75	3,2	5,0	8,0	10,2

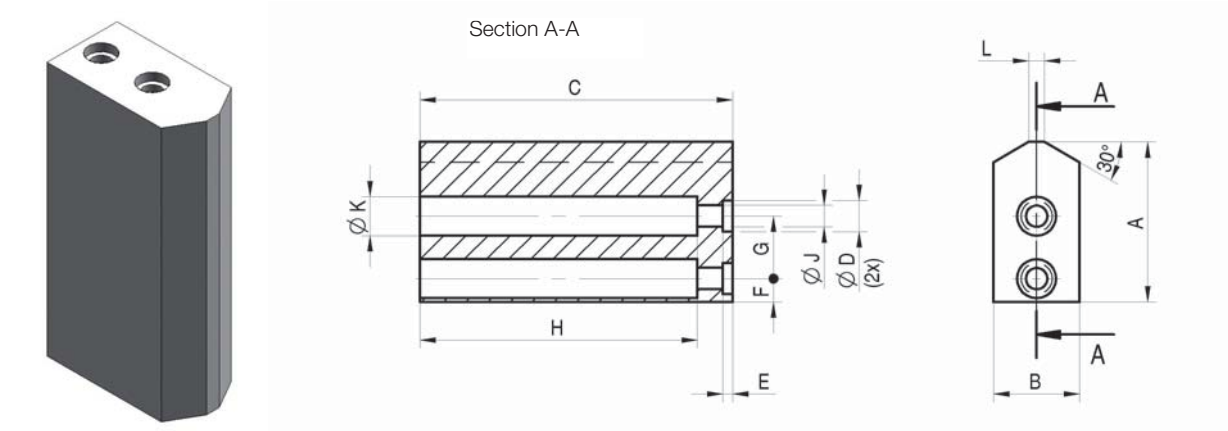

Jaw blank - aluminium (including fixing screws)

RPP / RZP	50	64	80	100	125	160	200	240	300
RPP - 2-jaw set	**170584**	**170585**	**170586**	**170587**	**170588**	**170589**	**170590**	**170591**	**170592**
RZP - 3-jaw set	**170597**	**170550**	**170552**	**170554**	**170556**	**170558**	**170560**	**170562**	**170564**
A	30	32	41	51	60	80	96	109	130
B	15	20	25	30	35	40	45	50	60
C	50	64	80	100	125	160	200	220	200
D +0,04/+0,02	5	6	8	10	10	14	16	16	22
E+0,2	2	2,5	2,5	3	3	4	4	4	6
F±0,1	5	5	6	7	9,5	10	15	15,5	20
G±0,1	12	13	16	20	24	32	40	44	46
H	43	55	69	88	112	141	176	200	170
J	3,4	4,5	5,5	6,6	6,6	11	13,5	13,5	17,5
K	6	8	10	11	11	18	20	20	26
L	2	3	4	5	6	8	9	10	16
Weight per jaw kg	0,05	0,1	0,18	0,35	0,6	1,2	2,0	2,8	3,4

RPP-A 50

APPLICATION

Universal gripping of round and angular workpieces with two parallel gripper fingers for handling with robots or portals.

TYPE

Available from sizes 50 to 160, each in two stroke variants. Optionally with gripping force safety device and/or dirt cover.
Fastening of the gripper fingers via tongue and groove.

CUSTOMER BENEFITS

- High gripping force with low dead weight and compact design
- Maximum flexibility thanks to versatile connection and fastening options
- Long service life and high reliability thanks to specially ground base jaws in proven T-slot guide

TECHNICAL FEATURES

- Centrically clamping in compact design made of high-strength, hard-coated aluminium alloy
- All functional parts made of hardened steel for maximum service life
- Wedge hook principle with pneumatic actuation (hydraulic actuation available on request)
- Position monitoring with inductive or magnetic position sensors
- Optionally available with FKM seals for higher temperatures up to 150°C (on request)
- Integrable purge air connection to prevent contamination

C40
RPP-A 50 - 2-jaw parallel gripper air operated with tongue and groove

Item No.	438040 ▲	438041 ▲	438042 ▲	438043 ▲	438044 ▲	438045 ▲
Design	RPP-A 50-1	RPP-A 50-2	RPP-A 50-2/GA	RPP-A 50-2/GA	RPP-A 50-1/GI	RPP-A 50-2/GI
Gripping force at 6 bar N	170	320	210	380	220	410
Stroke per jaw mm	4	2	4	2	4	2
Gripping force maintained N	-	-	30	60	30	60
Recommended workpiece weight kg	0,85	1,6	0,85	1,6	0,85	1,6
Weight kg	0,13	0,16	0,17	0,17	0,17	0,17
Width mm	50	50	50	50	50	50
Height mm	47	47	47	47	47	47
Depth mm	28	28	28	28	28	28
Mx Nm	12	12	12	12	12	12
My Nm	10	10	10	10	10	10
Mz Nm	10	10	10	10	10	10
Fz N	250	250	250	250	250	250
Operating pressure min./max. without GA/GI bar	2-8	2-8	-	-	-	-
Operating pressure min./max. with GA/GI bar	-	-	4-6,5	4-6,5	4-6,5	4-6,5
Clamping time s	0,02	0,02	0,01	0,01	0,02	0,02
Opening time s	0,02	0,02	0,02	0,02	0,01	0,01
Air consumption per cycle cm^3	5	5	5	5	5	5
Max. allowable length of jaw mm	50	50	50	50	50	50

RPP-A 50

Max. load on gripper and jaw

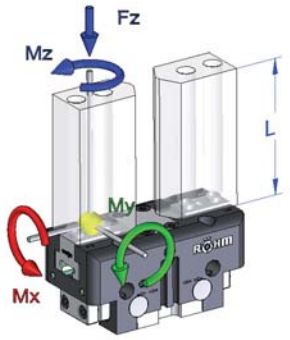

Clamping force diagram exterior gripping

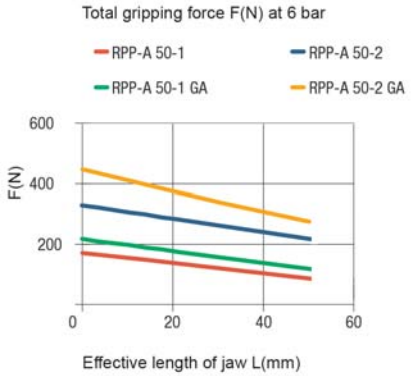

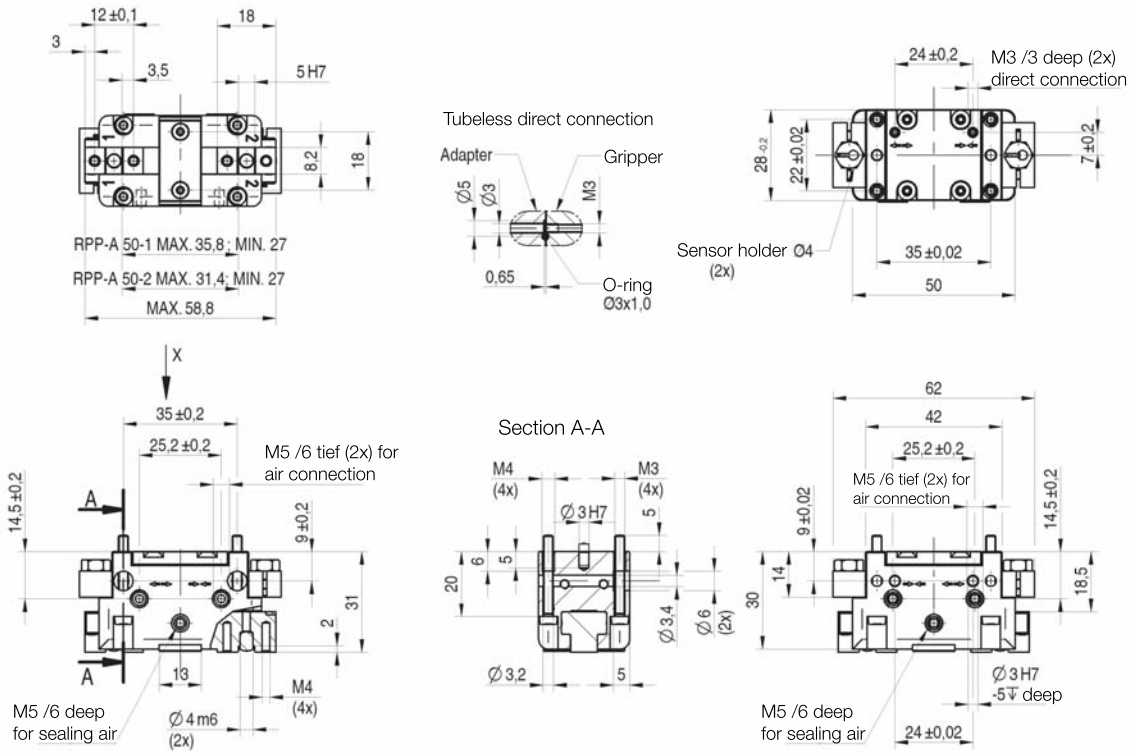

Type GA/GI with gripping force safety device

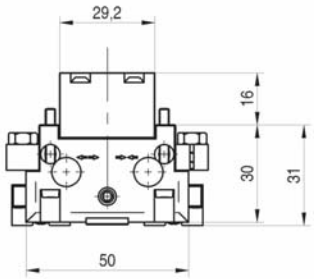

Accessories: Protective cover

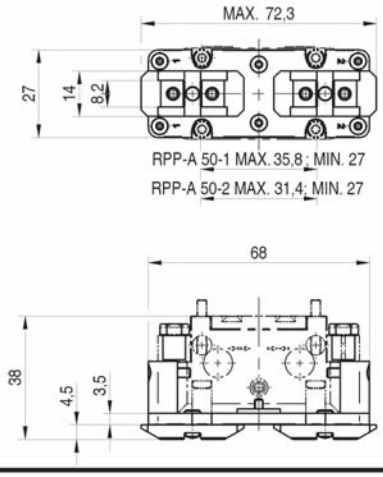

RPP-A 64

APPLICATION

Universal gripping of round and angular workpieces with two parallel gripper fingers for handling with robots or portals.

TYPE

Available from sizes 50 to 160, each in two stroke variants. Optionally with gripping force safety device and/or dirt cover.
Fastening of the gripper fingers via tongue and groove.

CUSTOMER BENEFITS

- High gripping force with low dead weight and compact design
- Maximum flexibility thanks to versatile connection and fastening options
- Long service life and high reliability thanks to specially ground base jaws in proven T-slot guide

TECHNICAL FEATURES

- Centrically clamping in compact design made of high-strength, hard-coated aluminium alloy
- All functional parts made of hardened steel for maximum service life
- Wedge hook principle with pneumatic actuation (hydraulic actuation available on request)
- Position monitoring with inductive or magnetic position sensors
- Optionally available with FKM seals for higher temperatures up to 150°C (on request)
- Integrable purge air connection to prevent contamination

C40
RPP-A 64 - 2-jaw parallel gripper air operated with tongue and groove

Item No.	436763 ▲	436764 ▲	436765 ▲	436766 ▲	436767 ▲	436768 ▲
Design	RPP-A 64-1	RPP-A 64-2	RPP-A 64-1/GA	RPP-A 64-2/GA	RPP-A 64-1/GI	RPP-A 64-2/GI
Gripping force at 6 bar N	240	450	320	600	350	650
Stroke per jaw mm	6	3	6	3	6	3
Gripping force-maintained N	-	-	80	150	80	150
Recommended workpiece weight kg	1,2	2,2	1,2	2,2	1,2	2,2
Weight kg	0,3	0,3	0,42	0,42	0,42	0,42
Width mm	64	64	64	64	64	64
Height mm	40	40	58	58	58	58
Depth mm	36	36	36	36	36	36
Mx Nm	15	15	15	15	15	15
My Nm	30	30	30	30	30	30
Mz Nm	25	25	25	25	25	25
Fz N	450	450	450	450	450	450
Operating pressure min./ max. without GA/GI bar	2-8	2-8	-	-	-	-
Operating pressure min./ max. with GA/GI bar	-	-	4-7	4-7	4-7	4-7
Clamping time s	0,02	0,02	0,01	0,01	0,02	0,02
Opening time s	0,02	0,02	0,02	0,02	0,1	0,1
Air consumption per cycle cm^3	10	10	10	10	10	10
Max. allowable length of jaw mm	64	64	64	64	64	64

RPP-A 64

Max. load on gripper and jaw

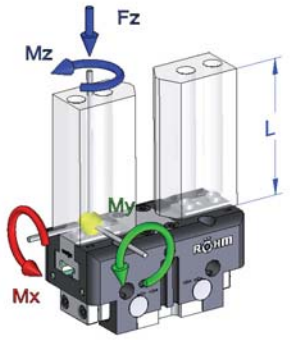

Clamping force diagram exterior gripping

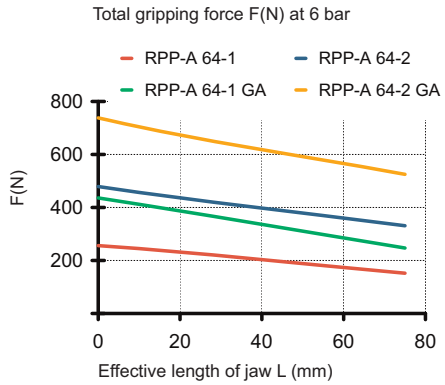

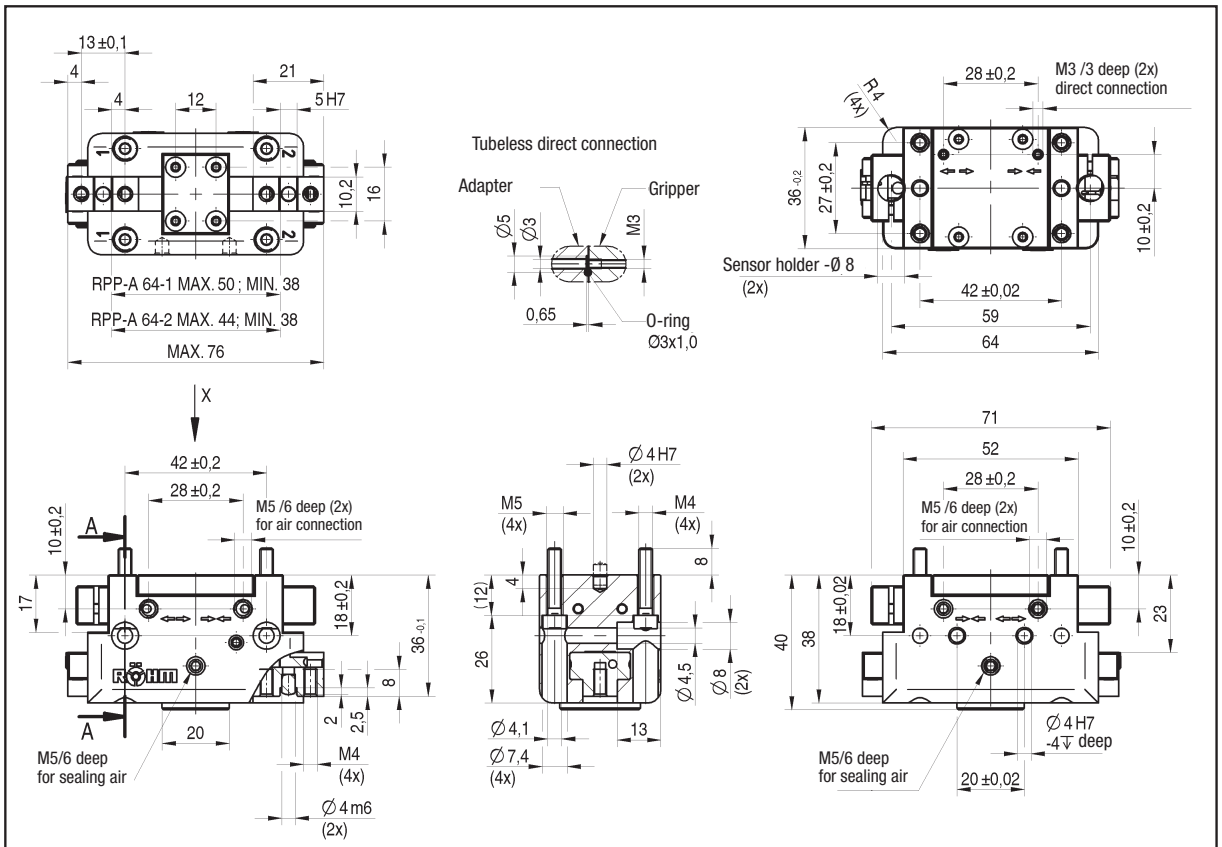

Type GA/GI with gripping force safety device

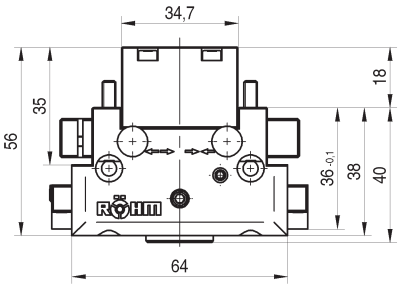

Accessories: Protective cover

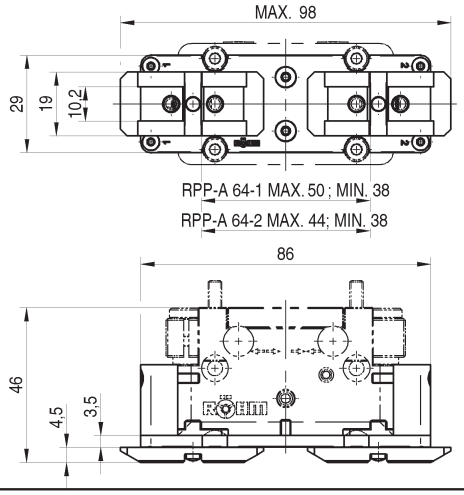

RPP-A 80

APPLICATION

Universal gripping of round and angular workpieces with two parallel gripper fingers for handling with robots or portals.

TYPE

Available from sizes 50 to 160, each in two stroke variants. Optionally with gripping force safety device and/or dirt cover.
Fastening of the gripper fingers via tongue and groove.

CUSTOMER BENEFITS

- High gripping force with low dead weight and compact design
- Maximum flexibility thanks to versatile connection and fastening options
- Long service life and high reliability thanks to specially ground base jaws in proven T-slot guide

TECHNICAL FEATURES

- Centrically clamping in compact design made of high-strength, hard-coated aluminium alloy
- All functional parts made of hardened steel for maximum service life
- Wedge hook principle with pneumatic actuation (hydraulic actuation available on request)
- Position monitoring with inductive or magnetic position sensors
- Optionally available with FKM seals for higher temperatures up to 150°C (on request)
- Integrable purge air connection to prevent contamination

C40
RPP-A 80 - 2-jaw parallel gripper air operated with tongue and groove

Item No.	434844 ▲	435027 ▲	435028 ▲	435029 ▲	435030 ▲	435031 ▲
Design	RPP-A 80-1	RPP-A 80-2	RPP-A 80-1/GA	RPP-A 80-2/GA	RPP-A 80-1/GI	RPP-A 80-2/GI
Gripping force at 6 bar N	380	700	520	970	550	1000
Stroke per jaw mm	8	4	8	4	8	4
Gripping force maintained N	-	-	140	270	140	270
Recommended workpiece weight kg	1,9	3,5	1,9	3,5	1,9	3,5
Weight kg	0,45	0,45	0,6	0,6	0,6	0,6
Width mm	80	80	80	80	80	80
Height mm	50	50	71	71	71	71
Depth mm	42	42	42	42	42	42
Mx Nm	30	30	30	30	30	30
My Nm	90	90	90	90	90	90
Mz Nm	35	35	35	35	35	35
Fz N	600	600	600	600	600	600
Operating pressure min./max. without GA/GI bar	2-8	2-8	-	-	-	-
Operating pressure min./max. with GA/GI bar	-	-	4-7	4-7	4-7	4-7
Clamping time s	0,03	0,03	0,02	0,02	0,03	0,03
Opening time s	0,03	0,03	0,03	0,03	0,02	0,02
Air consumption per cycle cm^3	20	20	20	20	20	20
Max. allowable length of jaw mm	80	80	80	80	80	80

RPP-A 80

Max. load on gripper and jaw

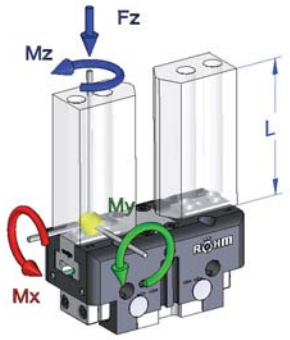

Clamping force diagram exterior gripping

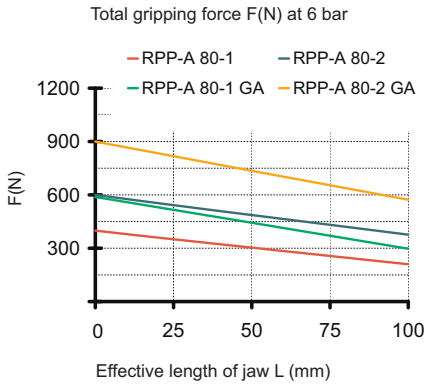

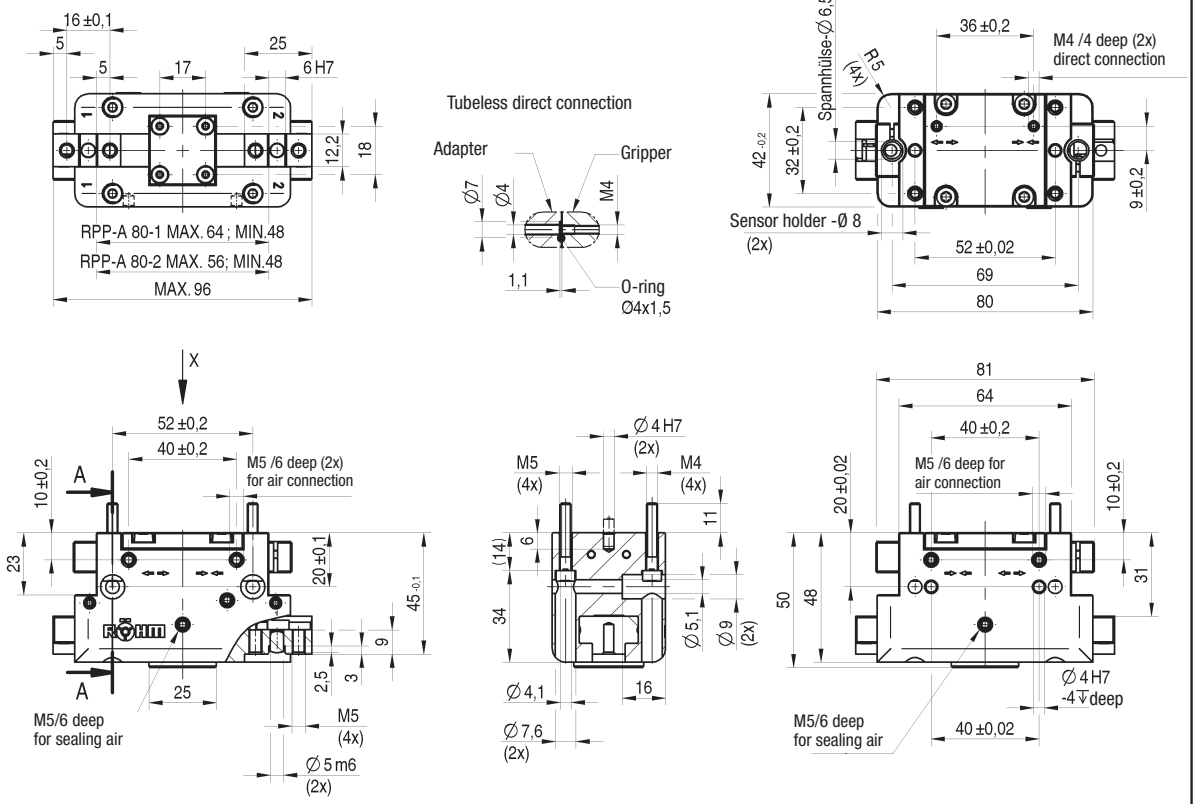

Type GA/GI with gripping force safety device

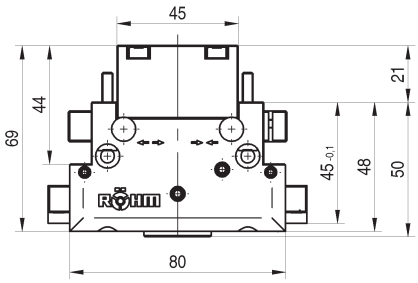

Accessories: Protective cover

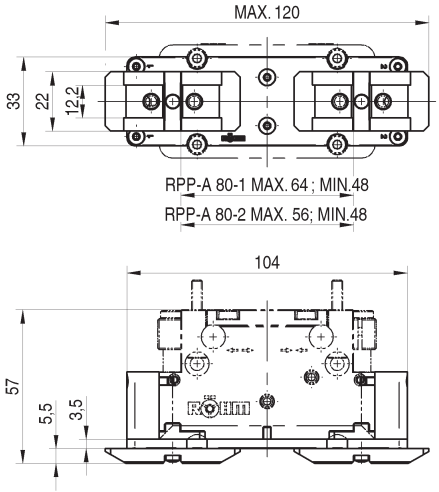

2-jaw parallel gripper

RPP-A 100

APPLICATION

Universal gripping of round and angular workpieces with two parallel gripper fingers for handling with robots or portals.

TYPE

Available from sizes 50 to 160, each in two stroke variants. Optionally with gripping force safety device and/or dirt cover.
Fastening of the gripper fingers via tongue and groove.

CUSTOMER BENEFITS

- High gripping force with low dead weight and compact design
- Maximum flexibility thanks to versatile connection and fastening options
- Long service life and high reliability thanks to specially ground base jaws in proven T-slot guide

TECHNICAL FEATURES

- Centrically clamping in compact design made of high-strength, hard-coated aluminium alloy
- All functional parts made of hardened steel for maximum service life
- Wedge hook principle with pneumatic actuation (hydraulic actuation available on request)
- Position monitoring with inductive or magnetic position sensors
- Optionally available with FKM seals for higher temperatures up to 150°C (on request)
- Integrable purge air connection to prevent contamination

C40
RPP-A 100 - 2-jaw parallel gripper air operated with tongue and groove

Item No.	434845 ▲	435032 ▲	435033 ▲	434846 ▲	435034 ▲	435035 ▲
Design	RPP-A 100-1	RPP-A 100-2	RPP-A 100-1/GA	RPP-A 100-2/GA	RPP-A 100-1/GI	RPP-A 100-2/GI
Gripping force at 6 bar N	600	1160	750	1450	800	1550
Stroke per jaw mm	10	5	10	5	10	5
Gripping force maintained N	-	-	150	290	150	290
Recommended workpiece weight kg	3	5,5	3	5,5	3	5,5
Weight kg	0,75	0,75	0,95	0,95	0,95	0,95
Width mm	100	100	100	100	100	100
Height mm	56	56	82,5	82,5	82,5	82,5
Depth mm	50	50	50	50	50	50
Mx Nm	45	45	45	45	45	45
My Nm	95	95	95	95	95	95
Mz Nm	45	45	45	45	45	45
Fz N	800	800	800	800	800	800
Operating pressure min./max. without GA/GI bar	2-8	2-8	-	-	-	-
Operating pressure min./max. with GA/GI bar	-	-	4-7	4-7	4-7	4-7
Clamping time s	0,05	0,05	0,03	0,03	0,05	0,05
Opening time s	0,05	0,05	0,05	0,05	0,03	0,03
Air consumption per cycle cm^3	40	40	40	40	40	40
Max. allowable length of jaw mm	100	100	100	100	100	100

2-jaw parallel gripper

RPP-A 100

Max. load on gripper and jaw

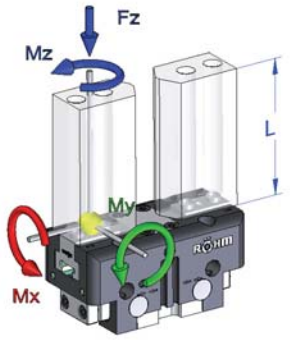

Clamping force diagram exterior gripping

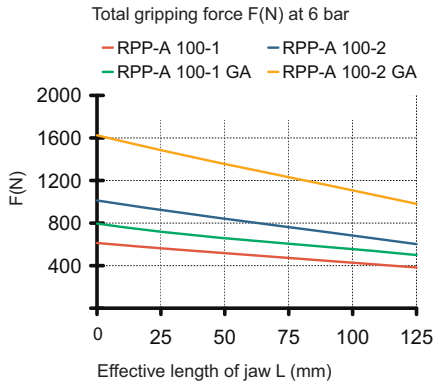

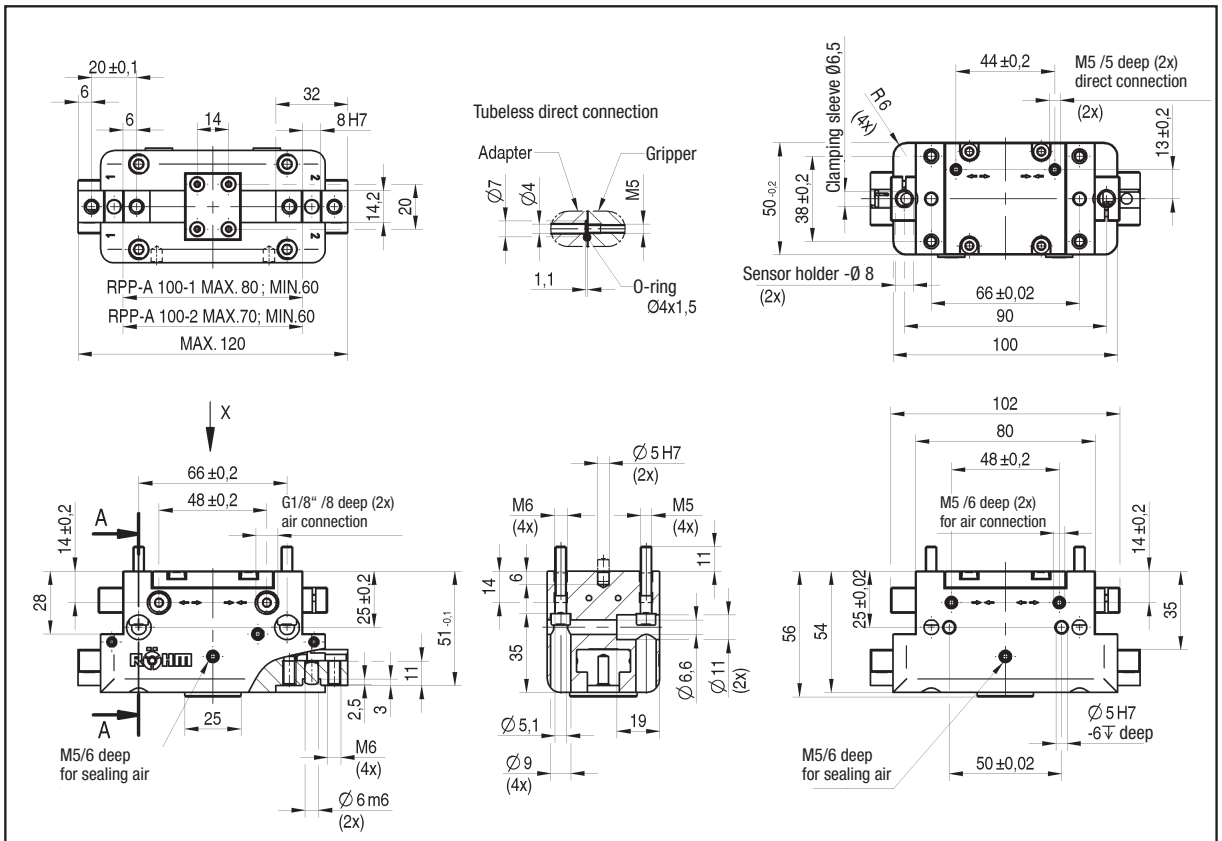

Type GA/GI with gripping force safety device

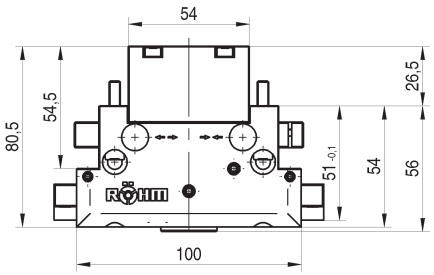

Accessories: Protective cover

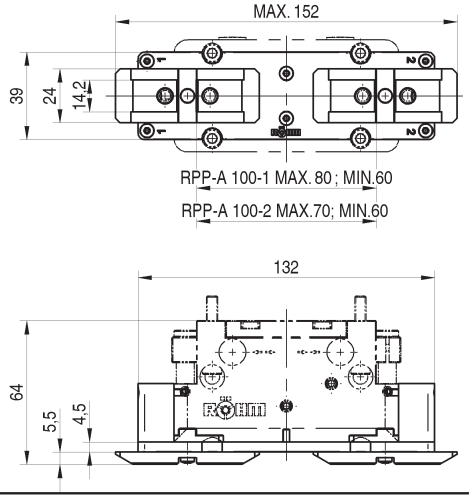

2-jaw parallel gripper
RPP-A

2-jaw parallel gripper

RPP-A 125

APPLICATION

Universal gripping of round and angular workpieces with two parallel gripper fingers for handling with robots or portals.

TYPE

Available from sizes 50 to 160, each in two stroke variants. Optionally with gripping force safety device and/or dirt cover.
Fastening of the gripper fingers via tongue and groove.

CUSTOMER BENEFITS

- High gripping force with low dead weight and compact design
- Maximum flexibility thanks to versatile connection and fastening options
- Long service life and high reliability thanks to specially ground base jaws in proven T-slot guide

TECHNICAL FEATURES

- Centrically clamping in compact design made of high-strength, hard-coated aluminium alloy
- All functional parts made of hardened steel for maximum service life
- Wedge hook principle with pneumatic actuation (hydraulic actuation available on request)
- Position monitoring with inductive or magnetic position sensors
- Optionally available with FKM seals for higher temperatures up to 150°C (on request)
- Integrable purge air connection to prevent contamination

C40
RPP-A 125 - 2-jaw parallel gripper air operated with tongue and groove

Item No.	435036 ▲	435037 ▲	435038 ▲	434847 ▲	435039 ▲	435040 ▲
Design	RPP-A 125-1	RPP-A 125-2	RPP-A 125-1/GA	RPP-A 125-2/GA	RPP-A 125-1/GI	RPP-A 125-2/GI
Gripping force at 6 bar N	950	1900	1230	2450	1300	2520
Stroke per jaw mm	13	6	13	6	13	6
Gripping force maintained N	-	-	280	550	280	550
Recommended workpiece weight kg	4,5	9,5	4,5	9,5	4,5	9,5
Weight kg	1,3	1,3	1,65	1,65	1,65	1,65
Width mm	125	125	125	125	125	125
Height mm	64	64	104	104	104	104
Depth mm	60	60	60	60	60	60
Mx Nm	60	60	60	60	60	60
My Nm	100	100	100	100	100	100
Mz Nm	70	70	70	70	70	70
Fz N	900	900	900	900	900	900
Operating pressure min./max. without GA/GI bar	2-8	2-8	-	-	-	-
Operating pressure min./max. with GA/GI bar	-	-	4-7	4-7	4-7	4-7
Clamping time s	0,08	0,08	0,07	0,07	0,1	0,1
Opening time s	0,08	0,08	0,1	0,1	0,07	0,07
Air consumption per cycle cm^3	70	70	70	70	70	70
Max. allowable length of jaw mm	125	125	125	125	125	125

2-jaw parallel gripper

RPP-A 125

Max. load on gripper and jaw

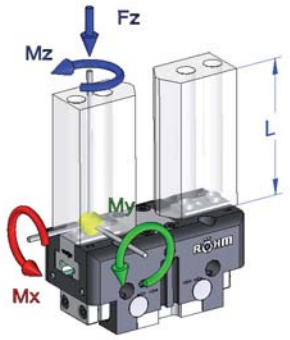

Clamping force diagram exterior gripping

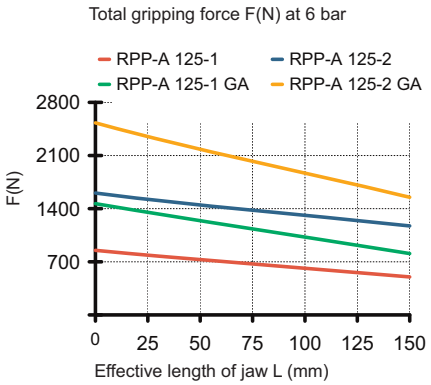

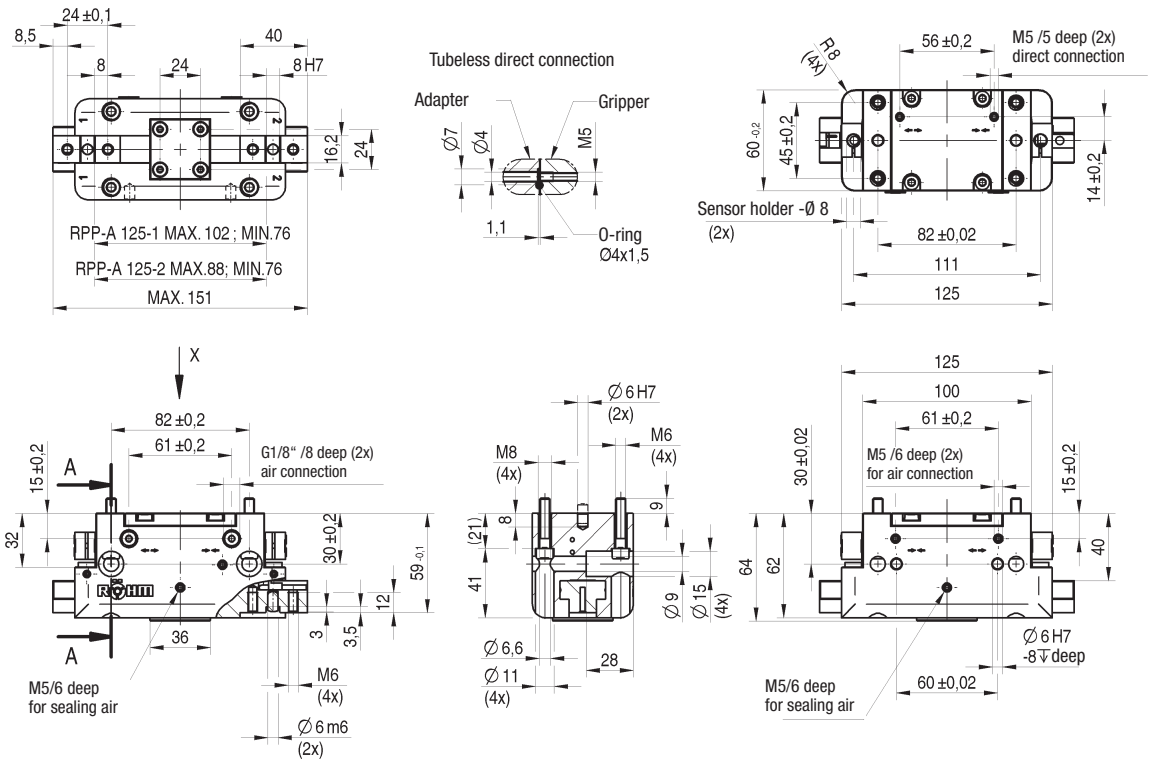

Type GA/GI with gripping force safety device

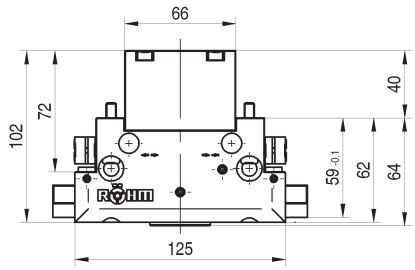

Accessories: Protective cover

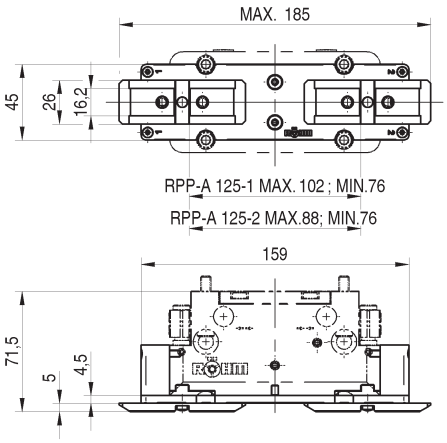

RPP-A 160

APPLICATION

Universal gripping of round and angular workpieces with two parallel gripper fingers for handling with robots or portals.

TYPE

Available from sizes 50 to 160, each in two stroke variants. Optionally with gripping force safety device and/or dirt cover.
Fastening of the gripper fingers via tongue and groove.

CUSTOMER BENEFITS

- High gripping force with low dead weight and compact design
- Maximum flexibility thanks to versatile connection and fastening options
- Long service life and high reliability thanks to specially ground base jaws in proven T-slot guide

TECHNICAL FEATURES

- Centrically clamping in compact design made of high-strength, hard-coated aluminium alloy
- All functional parts made of hardened steel for maximum service life
- Wedge hook principle with pneumatic actuation (hydraulic actuation available on request)
- Position monitoring with inductive or magnetic position sensors
- Optionally available with FKM seals for higher temperatures up to 150°C (on request)
- Integrable purge air connection to prevent contamination

C40
RPP-A 160 - 2-jaw parallel gripper air operated with tongue and groove

Item No.	434848 ▲	435041 ▲	436525 ▲	436526 ▲	436527 ▲	436528 ▲
Design	RPP-A 160-1	RPP-A 160-2	RPP-A 160-1/GA	RPP-A 160-2/GA	RPP-A 160-1/GI	RPP-A 160-2/GI
Gripping force at 6 bar N	1300	2500	1700	3300	1850	3450
Stroke per jaw mm	16	8	16	8	16	8
Gripping force maintained N	-	-	400	800	400	800
Recommended workpiece weight kg	6,5	12,5	6,5	12,5	6,5	12,5
Weight kg	2,5	2,5	3,1	3,1	3,1	3,1
Width mm	160	160	160	160	160	160
Height mm	78	78	126	126	126	126
Depth mm	72	72	72	72	72	72
Mx Nm	80	80	80	80	80	80
My Nm	100	100	100	100	100	100
Mz Nm	80	80	80	80	80	80
Fz N	1100	1100	1100	1100	1100	1100
Operating pressure min./max. without GA/GI bar	2-8	2-8	-	-	-	-
Operating pressure min./max. with GA/GI bar	-	-	4-7	4-7	4-7	4-7
Clamping time s	0,1	0,1	0,12	0,12	0,3	0,3
Opening time s	0,1	0,1	0,3	0,3	0,12	0,12
Air consumption per cycle cm^3	130	130	130	130	130	130
Max. allowable length of jaw mm	160	160	160	160	160	160

RPP-A 160

Max. load on gripper and jaw

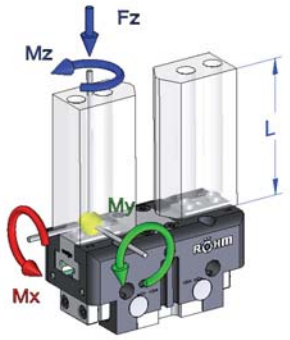

Clamping force diagram exterior gripping

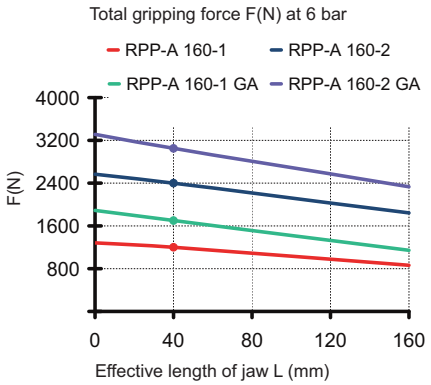

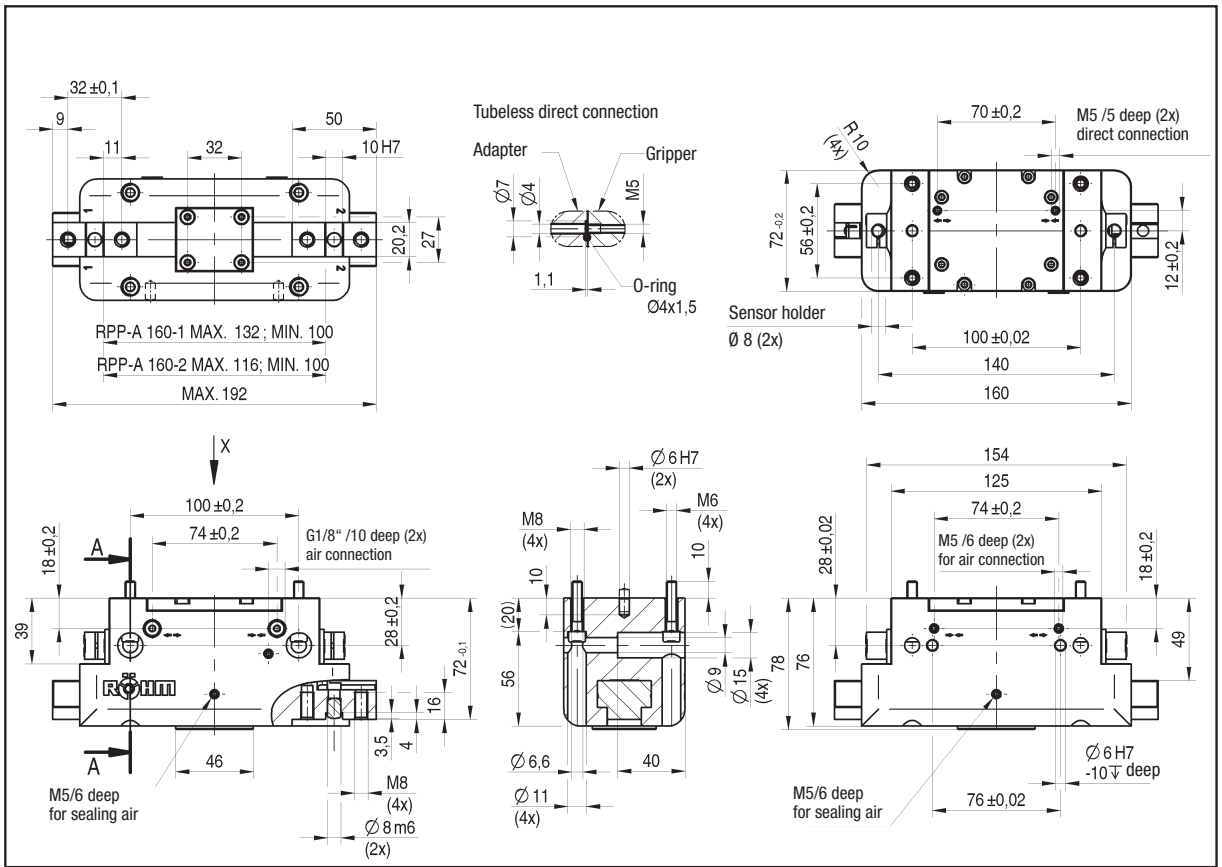

Type GA/GI with gripping force safety device

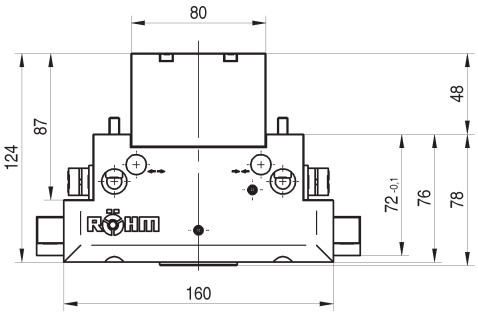

Accessories: Protective cover

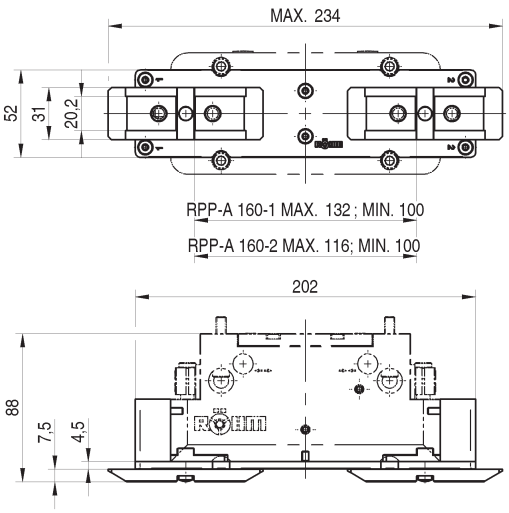

Accessories RPP-A

Jaw blank - steel (including fixing screws)
2-jaw set

Item no.	Number of jaws	Design	For
170683 ▲	2	steel	RPP-A 50
170675 ▲	2	steel	RPP-A 64
170676 ▲	2	steel	RPP-A 80
170677 ▲	2	steel	RPP-A 100
170678 ▲	2	steel	RPP-A 125
170679 ▲	2	steel	RPP-A 160

Jaw blank - aluminium (including fixing screws)
2-jaw set

Item no.	Number of jaws	Design	For
170693 ▲	2	aluminium	RPP-A 50
170685 ▲	2	aluminium	RPP-A 50
170686 ▲	2	aluminium	RPP-A 80
170687 ▲	2	aluminium	RPP-A 100
170688 ▲	2	aluminium	RPP-A 125
170689 ▲	2	aluminium	RPP-A 160

Protective cover

Item no.	For
170708 ▲	RPP-A 50
170700 ▲	RPP-A 64
170701 ▲	RPP-A 80
170702 ▲	RPP-A 100
170703 ▲	RPP-A 125
170704 ▲	RPP-A 125

Compressed air connection - L-Plug connector

Item no.	Design	For
802539	L-Plug connector M5 - 6 mm	RPP-50 / RPP-64 / RPP-80
477025	L-Plug connector 1/8 - 6 mm	RPP-100 - RPP-240

Pressure maintenance
for double acting gripper (G1/8)

Item no.
1078823

Proximity switch

Item no.	Size (diameter/ length)	Design	For
1149503	3x27	30 cm cable, plug M8x1-S49	RPP-A 50
229114	M8x1x30,5	5 m cable, open leads	RPP-A 64/ RPP-A 80/ RPP-A 100
389661	M8x1x46,5	3 m cable, open leads	RPP-A 125 - RPP-A 160

Magnetic field sensors

Item no.	Size (diameter/length)	Design	For
1231970	C-Nut	30 cm cable, plug M8x1-S49	RPP-50
1306268	C-Nut	2 m cable, open lead	RPP-64 to RPP-160

Accessories RPP-A

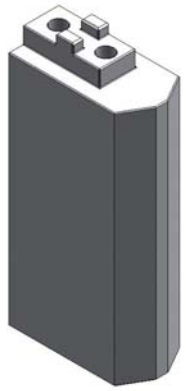

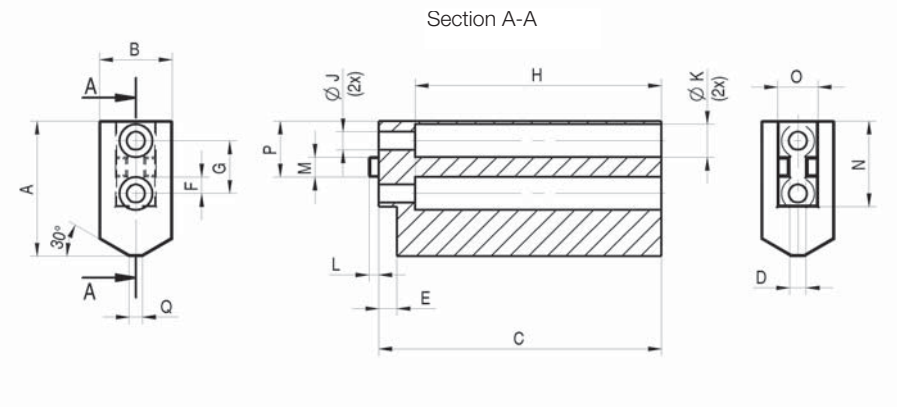

Jaw blank - steel (including fixing screws)

RPP-A / RZP-A Jaw blank - steel	50	64	80	100	125	160
RPP-A - 2-jaw set	**170683**	**170675**	**170676**	**170677**	**170678**	**170679**
RZP-A - 3-jaw set	**-**	**170825**	**170826**	**170827**	**170828**	**170829**
A	26	32	41	51	60	80
B	15	20	22	30	35	40
C	50	68,5	85,5	105,5	130,5	166,5
D +0,01/+0,03	4	4	5	6	6	8
E+0,2	2	4,5	5,5	5,5	5,5	6,5
F±0,1	3,5	4	5	6	8	11
G±0,1	12	13	16	20	24	32
H	45,5	59,5	74,5	94,5	119,5	153,5
J	3,4	4,5	5,5	6,6	6,6	9
K	6	8	10	11	11	15
L	2	2,5	3	3	3,5	4
Mf7	5	5	6	8	8	10
N-0,3/-0,5	22,825	21	26	33	41	51
O-0,3/-0,5	8	10,2	12,2	14,2	16,2	20,2
P+0,1	12,5	14	17	21	25,5	31
Q	4	3	4	5	6	8
Weight per jaw kg	0,13	0,26	0,46	1,0	1,8	3,5

Accessories RPP-A

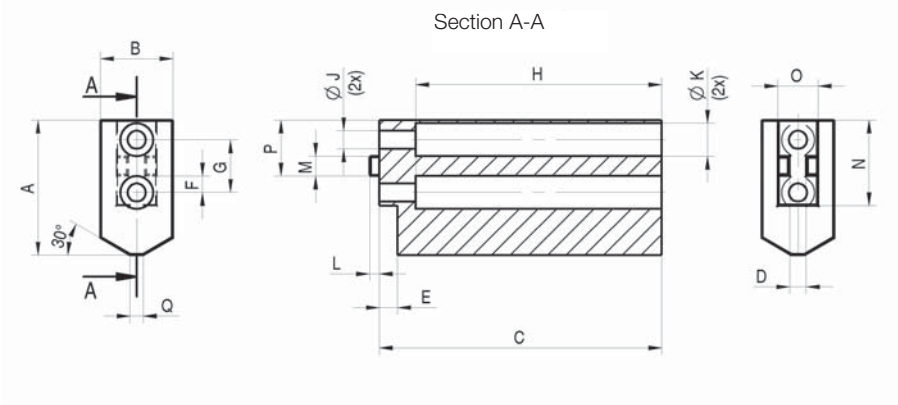

Jaw blank - aluminium (including fixing screws)

RPP-A / RZP-A Jaw blank - aluminium	50	64	80	100	125	160
RPP-A - 2-jaw set	**170693**	**170685**	**170686**	**170687**	**170688**	**170689**
RZP-A - 3-jaw set	**-**	**170835**	**170836**	**170837**	**170838**	**170839**
A	26	32	41	51	60	80
B	15	20	22	30	35	40
C	50	68,5	85,5	105,5	130,5	166,5
D +0,01/+0,03	4	4	5	6	6	8
E+0,2	2	4,5	5,5	5,5	5,5	6,5
F±0,1	3,5	4	5	6	8	11
G±0,1	12	13	16	20	24	32
H	45,5	59,5	74,5	94,5	119,5	153,5
J	3,4	4,5	5,5	6,6	6,6	9
K	6	8	10	11	11	15
L	2	2,5	3	3	3,5	4
Mf7	5	5	6	8	8	10
N-0,3/-0,5	22,825	21	26	33	41	51
O-0,3/-0,5	8	10,2	12,2	14,2	16,2	20,2
P+0,1	12,5	14	17	21	25,5	31
Q	4	3	4	5	6	8
Weight per jaw kg	0,13	0,1	0,16	0,35	0,62	1,2

Notes

NOMENCLATURE

RZP	-A	- 100	-1	/ GA	/ V
RÖHM **Z** centric gripper **P**neumatic	**A =** Alternative jaw fixture by tongue and groove	**Sizes** 64 - 300	Jaw stroke variant **1** = long stroke **2** = short stroke	Optional: spring safety **GA** = outside grip **GI** = inside grip	Optional: **V** = Viton FKM-sealing for temperatures up to 150 °C

3-JAW CENTRIC GRIPPER

Equipped with three centrically arranged gripper fingers, RÖHM RZP grippers are optimally suited for universal and self-centering gripping of round workpieces. Especially on robots or portals, the 3-jaw centric grippers will convince with their compact design, low dead weight and high gripping force.

ADVANTAGES AT A GLANCE

- High gripping force with low dead weight and compact design
- Maximum flexibility thanks to versatile connection and fastening options
- Long service life and high reliability thanks to specially ground base jaws in proven T-slot guide

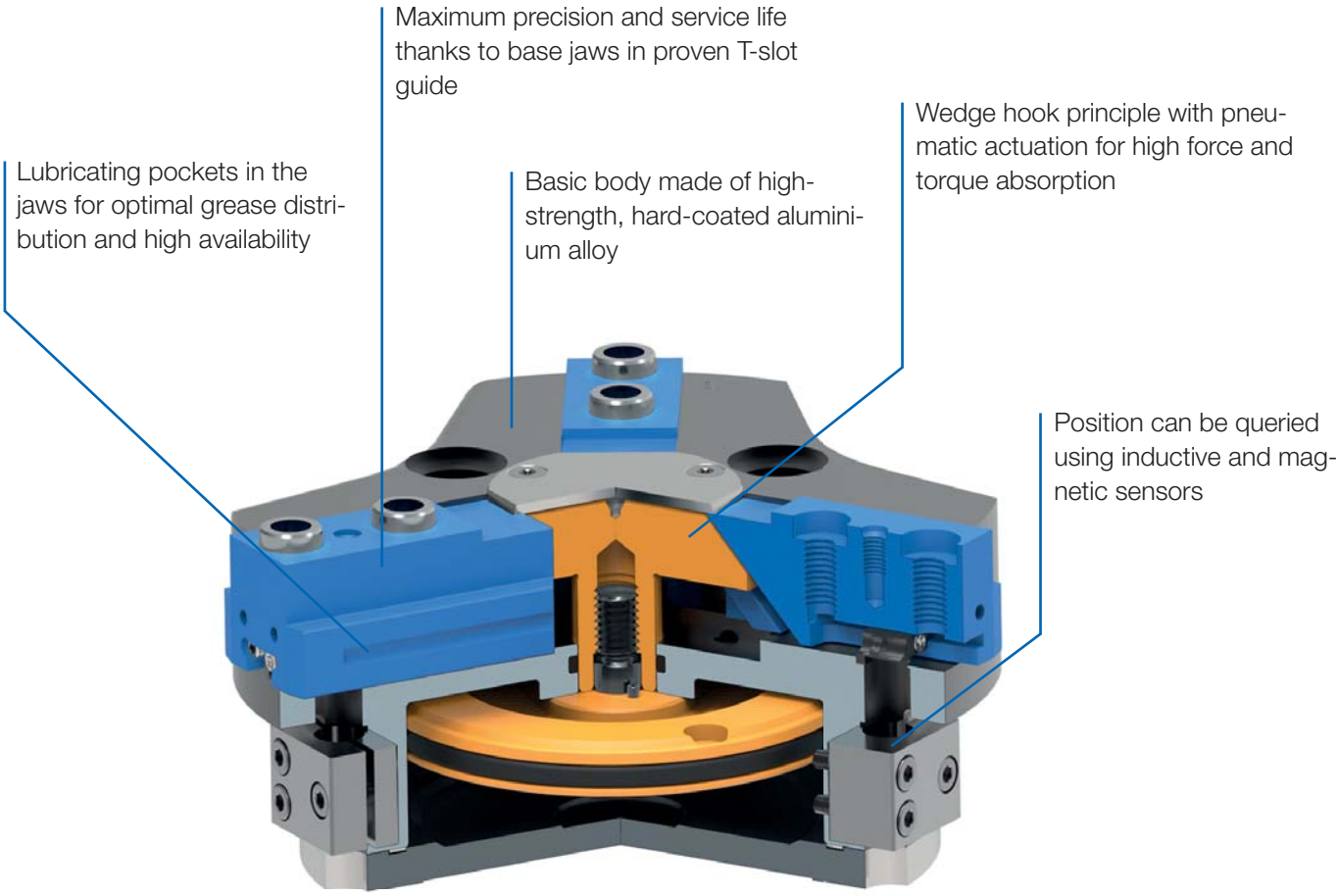

3-jaw centric gripper

RZP-64

APPLICATION

Universal gripping of round and cylindrical workpieces with three centrically arranged gripper fingers for handling with robots or portals.

TYPE

Available from sizes 64 to 300, each in two stroke variants. Optionally with gripping force safety device and/or dirt cover.
Fastening of the gripper fingers via centering sleeves (included in the scope of delivery).

CUSTOMER BENEFITS

- High gripping force with low dead weight and compact design
- High torque support for using long gripper fingers thanks to elongated jaw guide
- Maximum flexibility thanks to versatile connection and fastening options
- Long service life and high reliability thanks to specially ground base jaws in proven T-slot guide

TECHNICAL FEATURES

- Centrically clamping in compact design made of high-strength, hard-coated aluminium alloy
- All functional parts made of hardened steel for maximum service life
- Wedge hook principle with pneumatic actuation
- Optional inductive and magnetic position sensors
- Optionally available with FKM seals for higher temperatures up to 150°C (on request)
- Integrable purge air connection to prevent contamination

C40
RZP-64 - 3-jaw centric gripper air operated

Item No.	170050	170051 ▲	170052	170053 ▲	170054	170055 ▲
Design	RZP-64/3-1	RZP-64/3-2	RZP-64/3-1 GA	RZP-64/3-2 GA	RZP-64/3-1 GI	RZP-64/3-2 GI
Gripping force at 6 bar N	650	1200	850	1600	900	1700
Stroke per jaw mm	6	3	6	3	6	3
Gripping force maintained N	-	-	200	400	200	400
Recommended workpiece weight kg	3,2	6	3,2	6	3,2	6
Weight kg	0,45	0,45	0,55	0,55	0,55	0,55
Height mm	43,3	43,3	56,8	56,8	56,8	56,8
Ø mm	76	76	76	76	76	76
Mx Nm	40	40	40	40	40	40
My Nm	60	60	60	60	60	60
Mz Nm	40	40	40	40	40	40
Fz N	1100	1100	1100	1100	1100	1100
Operating pressure min./max. without GA/GI bar	2-8	2-8	-	-	-	-
Operating pressure min./max. with GA/GI bar	-	-	4-7	4-7	4-7	4-7
Clamping time s	0,03	0,03	0,02	0,02	0,04	0,04
Opening time s	0,03	0,03	0,04	0,04	0,02	0,02
Air consumption per cycle cm^3	25	25	25	25	25	25
Max. allowable length of jaw mm	90	85	85	80	85	80

RZP-64

Max. load on gripper and jaw

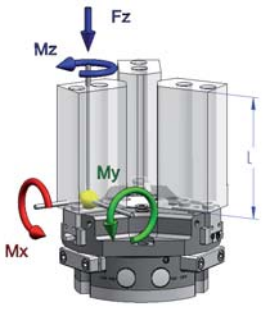

Total gripping force F(N) at 6 bar

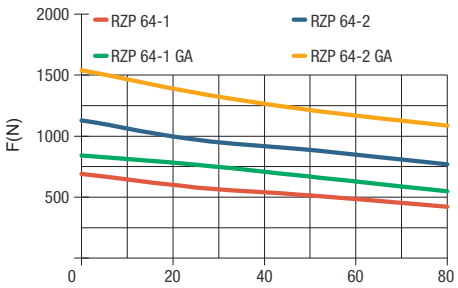

Effective length of jaw L (mm)

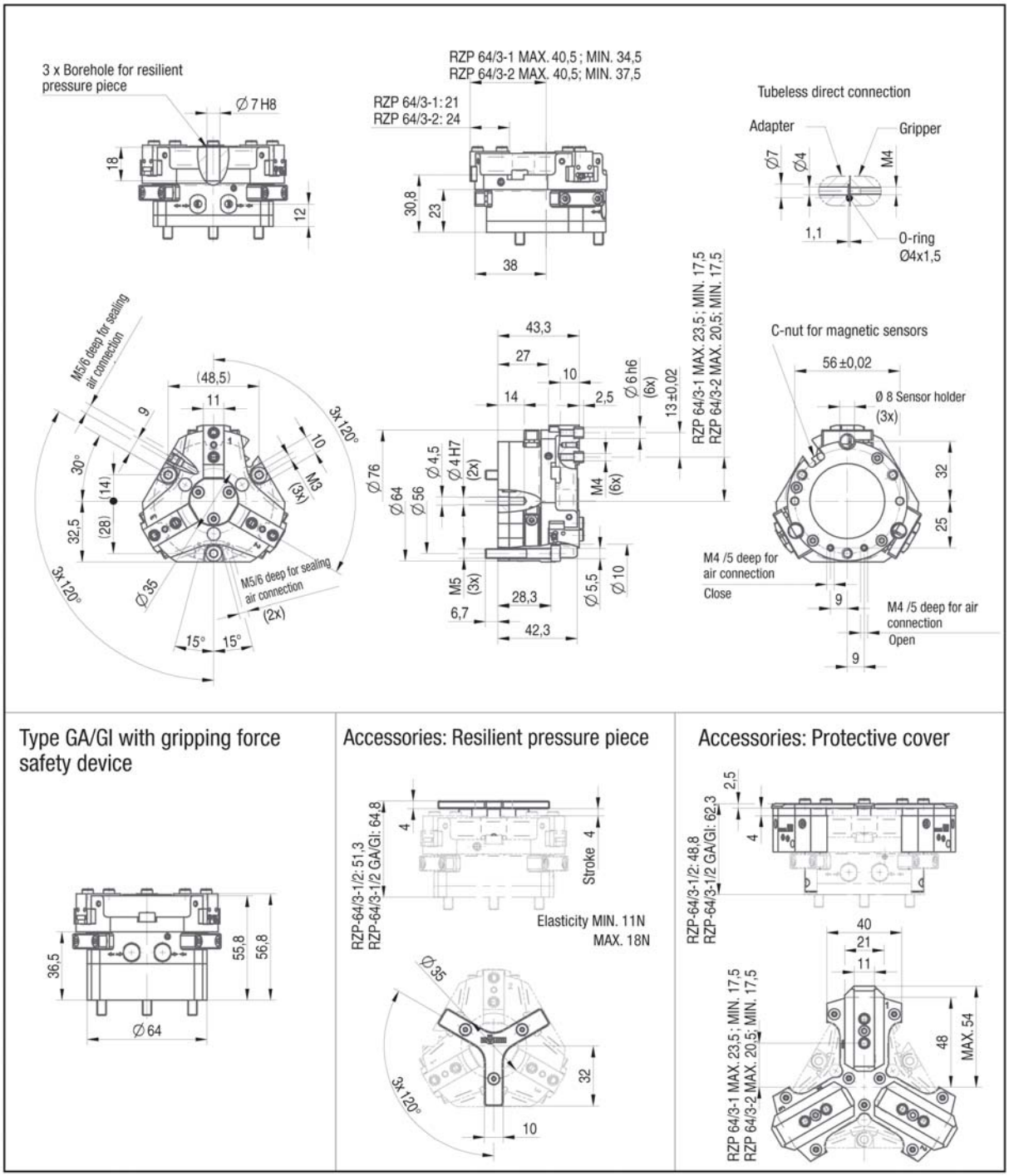

3-jaw centric gripper

RZP-80

APPLICATION

Universal gripping of round and cylindrical workpieces with three centrically arranged gripper fingers for handling with robots or portals.

TYPE

Available from sizes 64 to 300, each in two stroke variants. Optionally with gripping force safety device and/or dirt cover.
Fastening of the gripper fingers via centering sleeves (included in the scope of delivery).

CUSTOMER BENEFITS

- High gripping force with low dead weight and compact design
- High torque support for using long gripper fingers thanks to elongated jaw guide
- Maximum flexibility thanks to versatile connection and fastening options
- Long service life and high reliability thanks to specially ground base jaws in proven T-slot guide

TECHNICAL FEATURES

- Centrically clamping in compact design made of high-strength, hard-coated aluminium alloy
- All functional parts made of hardened steel for maximum service life
- Wedge hook principle with pneumatic actuation
- Optional inductive and magnetic position sensors
- Optionally available with FKM seals for higher temperatures up to 150°C (on request)
- Integrable purge air connection to prevent contamination

C40
RZP-80 - 3-jaw centric gripper air operated

Item No.	170056	170057 ▲	170058	170059 ▲	170060 ▲	170061 ▲
Design			RZP-80/3-1 GA	RZP-80/3-2 GA		
Gripping force at 6 bar N	1200	2400	1550	3100	1700	3250
Stroke per jaw mm	8	4	8	4	8	4
Gripping force maintained N	-	-	350	700	350	700
Recommended workpiece weight kg	6	12	6	12	6	12
Weight kg	0,8	0,8	1	1	1	1
Height mm	49,3	49,3	64,3	64,3	64,3	64,3
Ø mm	96	96	96	96	96	96
Mx Nm	60	60	60	60	60	60
My Nm	95	95	95	95	95	95
Mz Nm	55	55	55	55	55	55
Fz N	1500	1500	1500	1500	1500	1500
Operating pressure min./max. without GA/GI bar	2-8	2-8	-	-	-	-
Operating pressure min./max. with GA/GI bar	-	-	4-7	4-7	4-7	4-7
Clamping time s	0,05	0,05	0,03	0,03	0,06	0,06
Opening time s	0,05	0,05	0,05	0,05	0,04	0,04
Air consumption per cycle cm^3	60	60	60	60	60	60
Max. allowable length of jaw mm	110	105	100	100	105	100

3-jaw centric gripper

RZP-80

Max. load on gripper and jaw

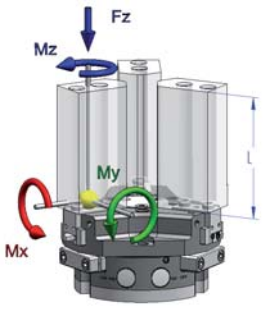

Clamping force diagram exterior gripping

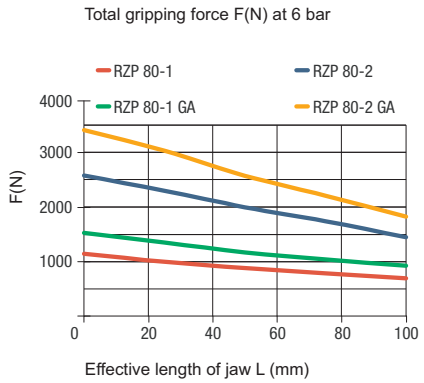

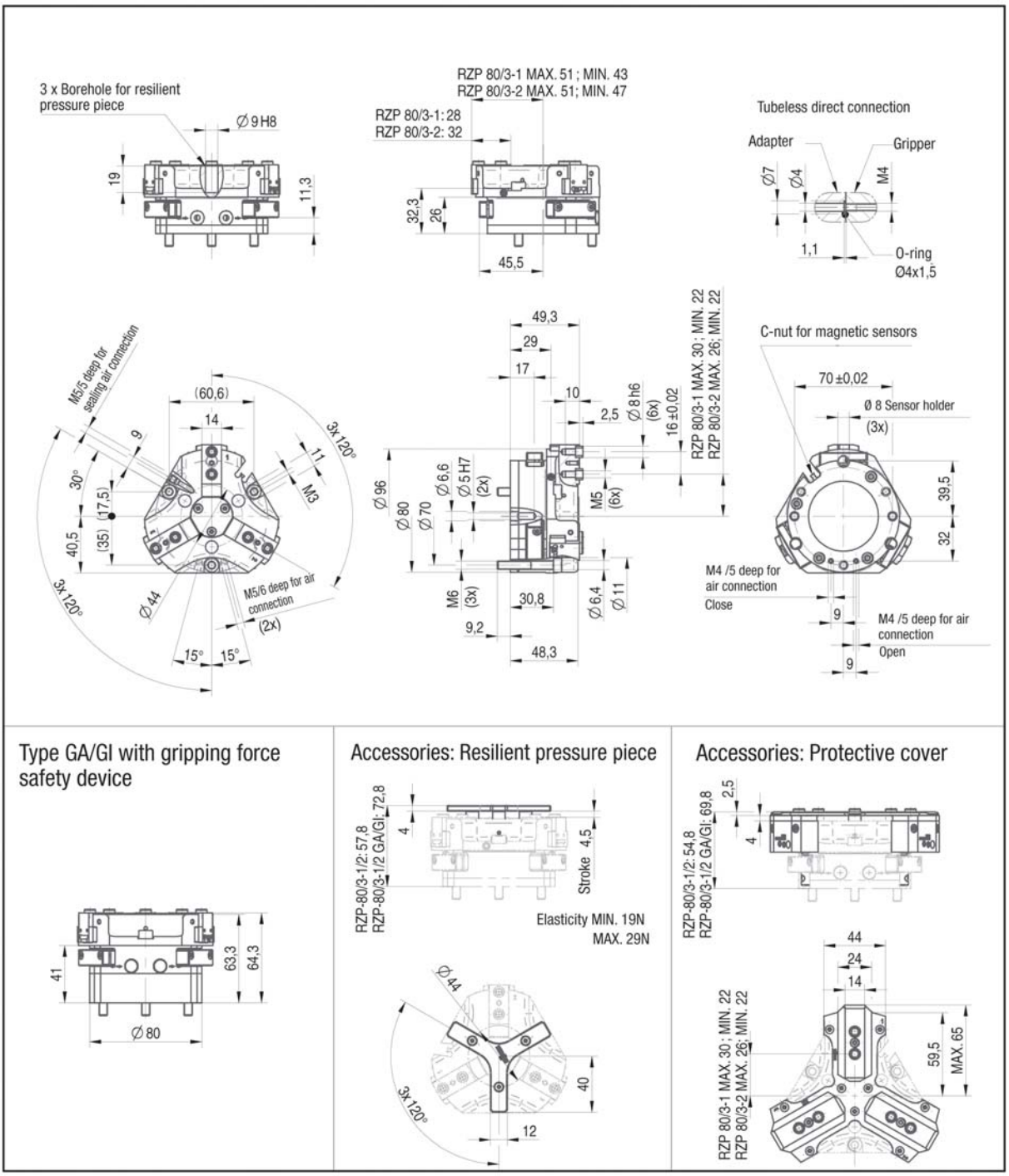

Centric gripper RZP

3-jaw centric gripper

RZP-100

APPLICATION

Universal gripping of round and cylindrical workpieces with three centrically arranged gripper fingers for handling with robots or portals.

TYPE

Available from sizes 64 to 300, each in two stroke variants. Optionally with gripping force safety device and/or dirt cover.
Fastening of the gripper fingers via centering sleeves (included in the scope of delivery).

CUSTOMER BENEFITS

- High gripping force with low dead weight and compact design
- High torque support for using long gripper fingers thanks to elongated jaw guide
- Maximum flexibility thanks to versatile connection and fastening options
- Long service life and high reliability thanks to specially ground base jaws in proven T-slot guide

TECHNICAL FEATURES

- Centrically clamping in compact design made of high-strength, hard-coated aluminium alloy
- All functional parts made of hardened steel for maximum service life
- Wedge hook principle with pneumatic actuation
- Optional inductive and magnetic position sensors
- Optionally available with FKM seals for higher temperatures up to 150°C (on request)
- Integrable purge air connection to prevent contamination

C40
RZP-100 - 3-jaw centric gripper air operated

Item No.	170062	170063 ▲	170064 ▲	170065 ▲	170066 ▲	170067 ▲
Design	RZP-100/3-1	RZP-100/3-2	RZP-100/3-1 GA	RZP-100/3-2 GA	RZP-100/3-1 GI	RZP-100/3-2 GI
Gripping force at 6 bar N	2000	4000	2650	5300	2800	5620
Stroke per jaw mm	10	5	10	5	10	5
Gripping force maintained N	-	-	650	1300	650	1300
Recommended workpiece weight kg	10	20	10	20	10	20
Weight kg	1,4	1,4	2	2	2	2
Height mm	59,3	59,3	79,3	79,3	79,3	79,3
Ø mm	120	120	120	120	120	120
Mx Nm	80	80	80	80	80	80
My Nm	115	115	115	115	115	115
Mz Nm	70	70	70	70	70	70
Fz N	2000	2000	2000	2000	2000	2000
Operating pressure min./max. without GA/GI bar	2-8	2-8	-	-	-	-
Operating pressure min./max. with GA/GI bar	-	-	4-7	4-7	4-7	4-7
Clamping time s	0,1	0,1	0,1	0,1	0,2	0,2
Opening time s	0,1	0,1	0,2	0,2	0,1	0,1
Air consumption per cycle cm^3	120	120	120	120	120	120
Max. allowable length of jaw mm	145	135	135	125	135	125

3-jaw centric gripper

RZP-100

Max. load on gripper and jaw

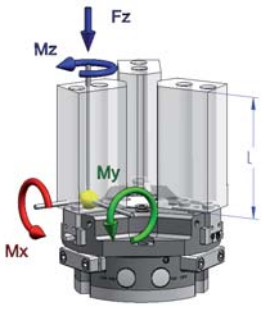

Clamping force diagram exterior gripping

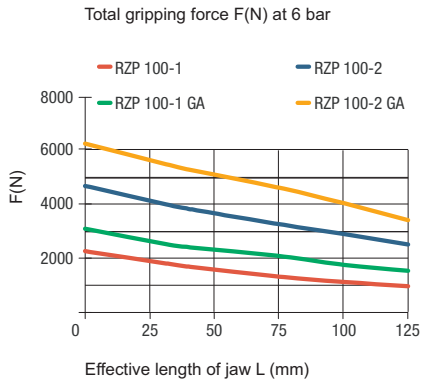

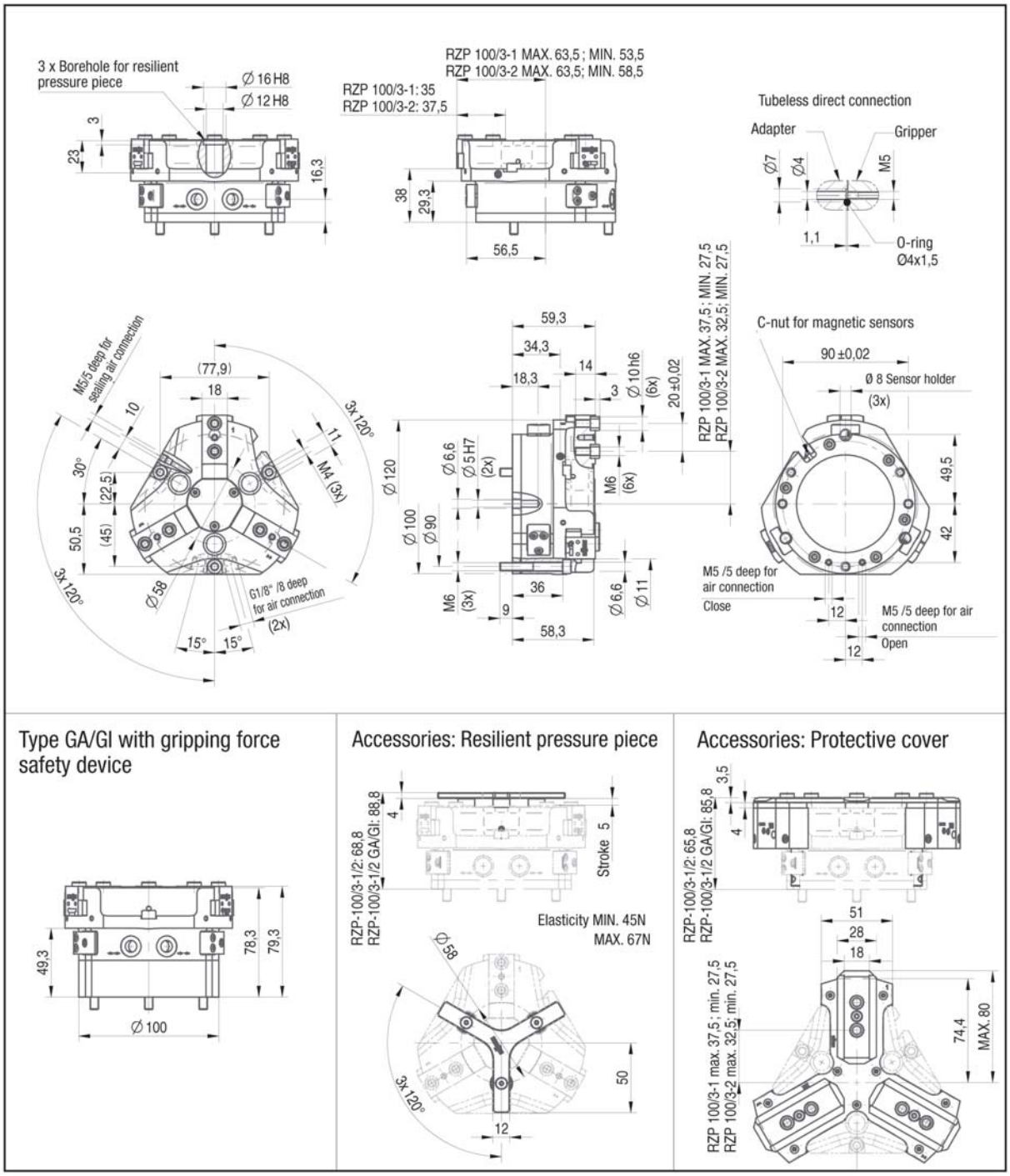

Centric gripper RZP

3-jaw centric gripper

RZP-125

APPLICATION

Universal gripping of round and cylindrical workpieces with three centrically arranged gripper fingers for handling with robots or portals.

TYPE

Available from sizes 64 to 300, each in two stroke variants. Optionally with gripping force safety device and/or dirt cover.
Fastening of the gripper fingers via centering sleeves (included in the scope of delivery).

CUSTOMER BENEFITS

- High gripping force with low dead weight and compact design
- High torque support for using long gripper fingers thanks to elongated jaw guide
- Maximum flexibility thanks to versatile connection and fastening options
- Long service life and high reliability thanks to specially ground base jaws in proven T-slot guide

TECHNICAL FEATURES

- Centrically clamping in compact design made of high-strength, hard-coated aluminium alloy
- All functional parts made of hardened steel for maximum service life
- Wedge hook principle with pneumatic actuation
- Optional inductive and magnetic position sensors
- Optionally available with FKM seals for higher temperatures up to 150°C (on request)
- Integrable purge air connection to prevent contamination

C40
RZP-125 - 3-jaw centric gripper air operated

Item No.	170068 ▲	170069 ▲	170070	170071 ▲	170072	170073 ▲
Design	RZP-125/3-1	RZP-125/3-2	RZP-125/3-1 GA	RZP-125/3-2 GA	RZP-125/3-1 GI	RZP-125/3-2 GI
Gripping force at 6 bar N	3200	6000	4200	7800	4400	8000
Stroke per jaw mm	13	6	13	6	13	6
Gripping force maintained N	-	-	1000	1800	1000	1800
Recommended workpiece weight kg	16	30	16	30	16	30
Weight kg	2,4	2,4	3,2	3,2	3,2	3,2
Height mm	67	67	91,5	91,5	91,5	91,5
Ø mm	150	150	150	150	150	150
Mx Nm	120	120	120	120	120	120
My Nm	145	145	145	145	145	145
Mz Nm	100	100	100	100	100	100
Fz N	2800	2800	2800	2800	2800	2800
Operating pressure min./max. without GA/GI bar	2-8	2-8	-	-	-	-
Operating pressure min./max. with GA/GI bar	-	-	4-7	4-7	4-7	4-7
Clamping time s	0,2	0,2	0,17	0,17	0,35	0,35
Opening time s	0,2	0,2	0,35	0,35	0,17	0,17
Air consumption per cycle cm^3	230	230	230	230	230	230
Max. allowable length of jaw mm	180	170	170	160	170	160

3-jaw centric gripper

RZP-125

Max. load on gripper and jaw

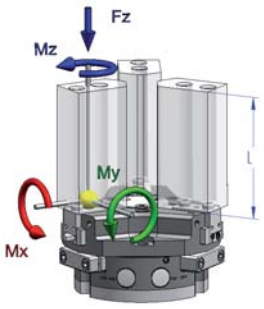

Clamping force diagram exterior gripping

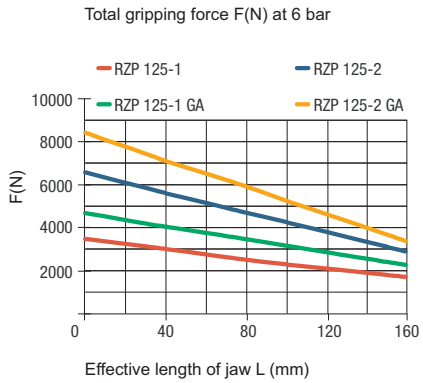

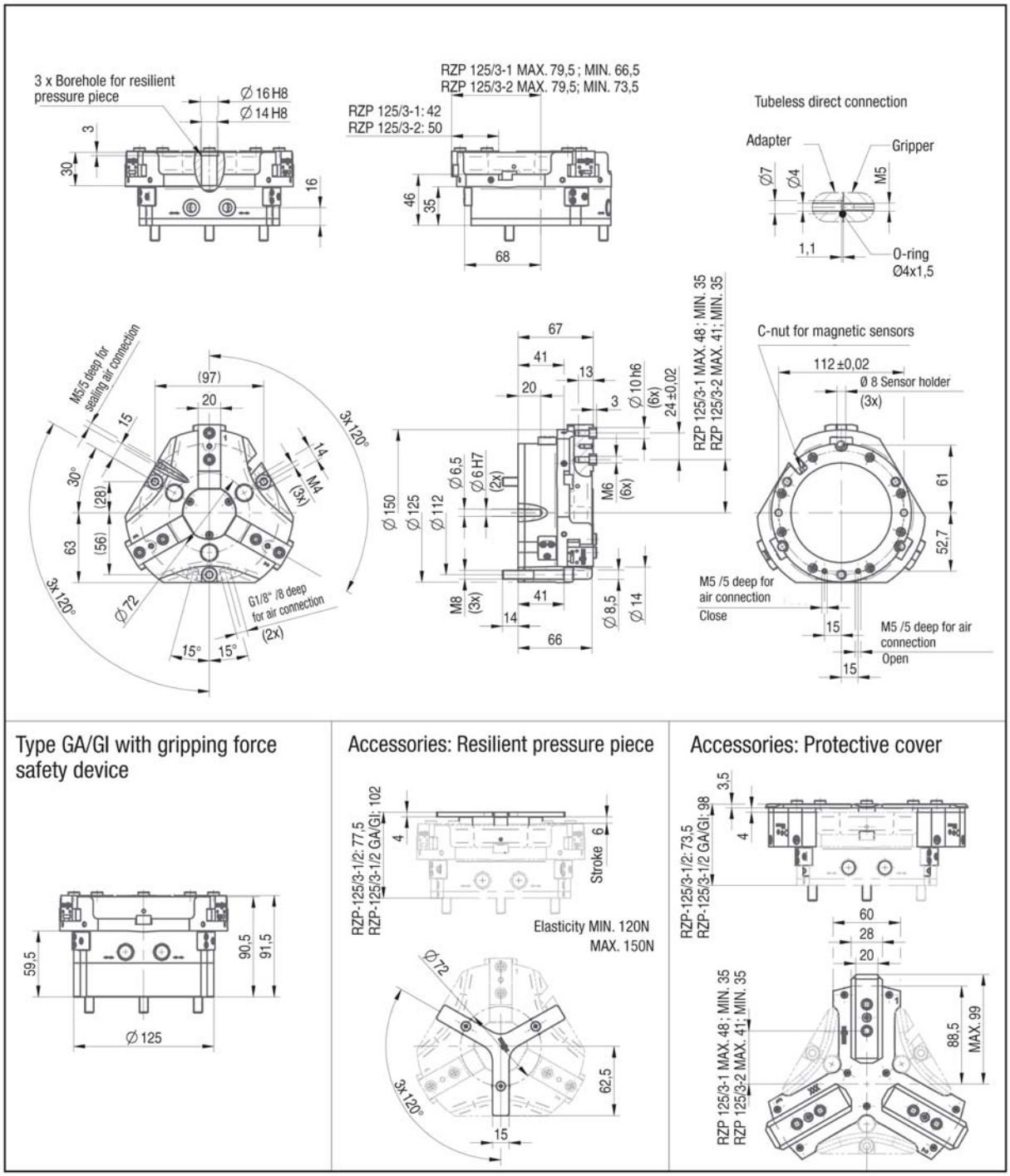

Centric gripper RZP

3-jaw centric gripper

RZP-160

APPLICATION

Universal gripping of round and cylindrical workpieces with three centrically arranged gripper fingers for handling with robots or portals.

TYPE

Available from sizes 64 to 300, each in two stroke variants. Optionally with gripping force safety device and/or dirt cover.
Fastening of the gripper fingers via centering sleeves (included in the scope of delivery).

CUSTOMER BENEFITS

- High gripping force with low dead weight and compact design
- High torque support for using long gripper fingers thanks to elongated jaw guide
- Maximum flexibility thanks to versatile connection and fastening options
- Long service life and high reliability thanks to specially ground base jaws in proven T-slot guide

TECHNICAL FEATURES

- Centrically clamping in compact design made of high-strength, hard-coated aluminium alloy
- All functional parts made of hardened steel for maximum service life
- Wedge hook principle with pneumatic actuation
- Optional inductive and magnetic position sensors
- Optionally available with FKM seals for higher temperatures up to 150°C (on request)
- Integrable purge air connection to prevent contamination

C40
RZP-160 - 3-jaw centric gripper air operated

Item No.	170074	170075 ▲	170076 ▲	170077 ▲	170078 ▲	170079 ▲
Design	RZP-160/3-1	RZP-160/3-2	RZP-160/3-1 GA	RZP-160/3-2 GA	RZP-160/3-1 GI	RZP-160/3-2 GI
Gripping force at 6 bar N	6000	11000	8000	15000	8500	16000
Stroke per jaw mm	16	8	16	8	16	8
Gripping force maintained N	-	-	2000	4000	2000	4000
Recommended workpiece weight kg	30	55	30	55	30	55
Weight kg	5,5	5,5	8	8	8	8
Height mm	81	81	111	111	111	111
Ø mm	190	190	190	190	190	190
Mx Nm	170	170	170	170	170	170
My Nm	180	180	180	180	180	180
Mz Nm	130	130	130	130	130	130
Fz N	4300	4300	4300	4300	4300	4300
Operating pressure min./max. without GA/GI bar	2-8	2-8	-	-	-	-
Operating pressure min./max. with GA/GI bar	-	-	4-7	4-7	4-7	4-7
Clamping time s	0,5	0,5	0,4	0,4	0,8	0,8
Opening time s	0,5	0,5	0,8	0,8	0,4	0,4
Air consumption per cycle cm³	520	520	520	520	520	520
Max. allowable length of jaw mm	220	210	210	200	200	200

RZP-160

Max. load on gripper and jaw

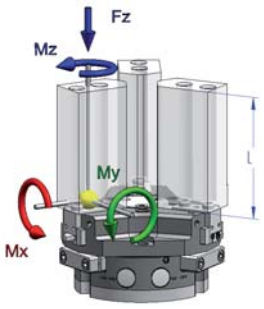

Clamping force diagram exterior gripping

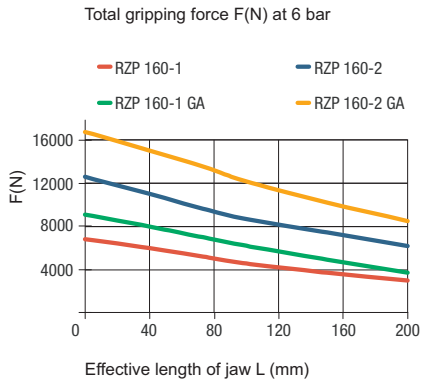

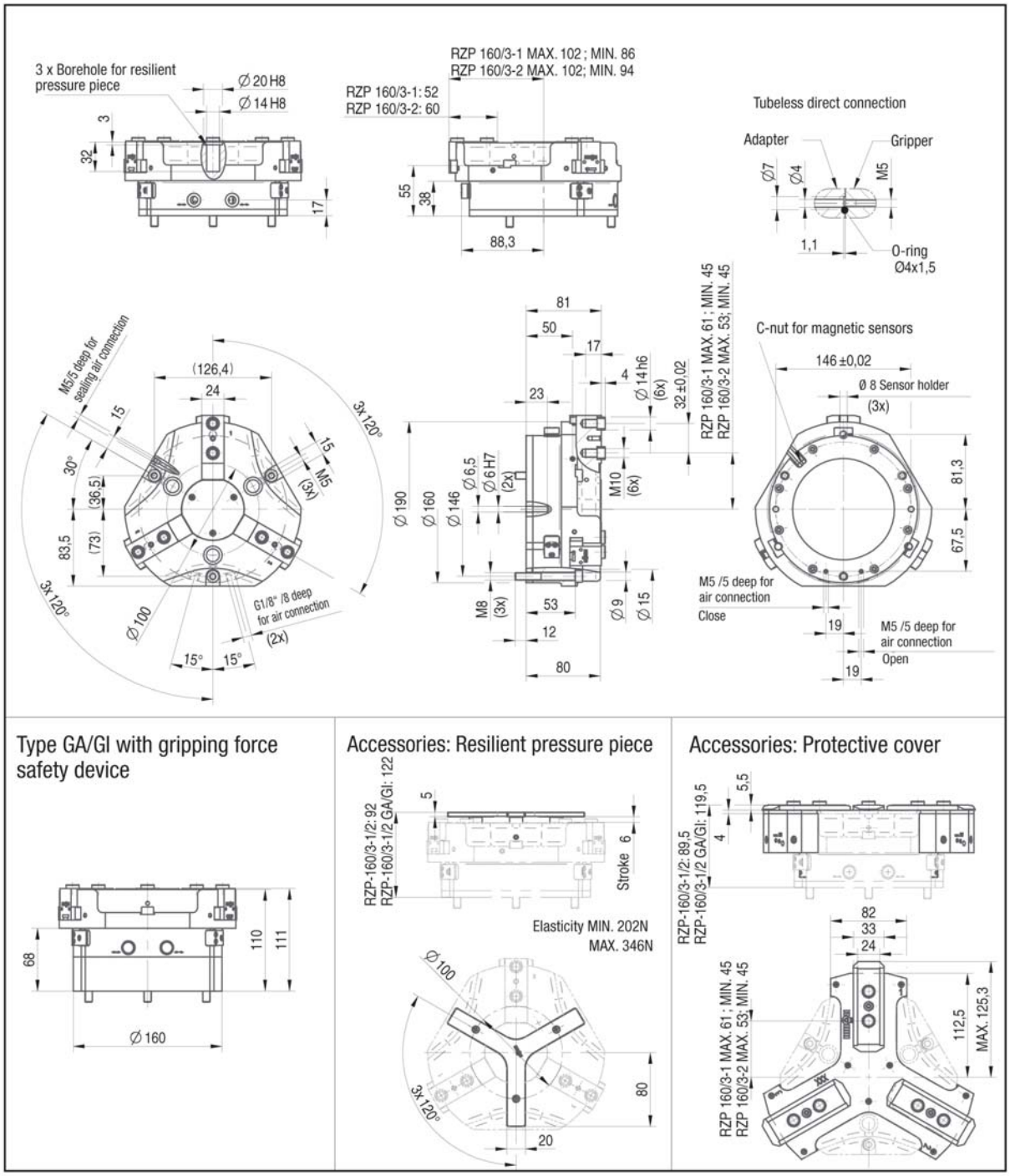

3-jaw centric gripper

RZP-200

APPLICATION

Universal gripping of round and cylindrical workpieces with three centrically arranged gripper fingers for handling with robots or portals.

TYPE

Available from sizes 64 to 300, each in two stroke variants. Optionally with gripping force safety device and/or dirt cover.
Fastening of the gripper fingers via centering sleeves (included in the scope of delivery).

CUSTOMER BENEFITS

- High gripping force with low dead weight and compact design
- High torque support for using long gripper fingers thanks to elongated jaw guide
- Maximum flexibility thanks to versatile connection and fastening options
- Long service life and high reliability thanks to specially ground base jaws in proven T-slot guide

TECHNICAL FEATURES

- Centrically clamping in compact design made of high-strength, hard-coated aluminium alloy
- All functional parts made of hardened steel for maximum service life
- Wedge hook principle with pneumatic actuation
- Optional inductive and magnetic position sensors
- Optionally available with FKM seals for higher temperatures up to 150°C (on request)
- Integrable purge air connection to prevent contamination

C40
RZP-200 - 3-jaw centric gripper air operated

Item No.	170080 ▲	170081 ▲	170082	170083 ▲	170084	170085 ▲
Design	RZP-200/3-1	RZP-200/3-2	RZP-200/3-1 GA	RZP-200/3-2 GA	RZP-200/3-1 GI	RZP-200/3-2 GI
Gripping force at 6 bar N	7500	12500	9300	15500	9500	16200
Stroke per jaw mm	25	14	25	14	25	14
Gripping force maintained N	-	-	1800	3000	1800	3000
Recommended workpiece weight kg	37	62	37	62	37	62
Weight kg	10	10	13	13	13	13
Height mm	96	96	132	132	132	132
Ø mm	250	250	250	250	250	250
Mx Nm	180	180	180	180	180	180
My Nm	200	200	200	200	200	200
Mz Nm	100	100	100	100	100	100
Fz N	5000	5000	5000	5000	5000	5000
Operating pressure min./max. without GA/GI bar	2-8	2-8	-	-	-	-
Operating pressure min./max. with GA/GI bar	-	-	4-7	4-7	4-7	4-7
Clamping time s	1,2	1,2	1	1	1,5	1,5
Opening time s	1,2	1,2	1,5	1,5	1	1
Air consumption per cycle cm^3	1000	1000	1000	1000	1000	1000
Max. allowable length of jaw mm	280	250	250	200	250	200

3-jaw centric gripper

RZP-200

Max. load on gripper and jaw

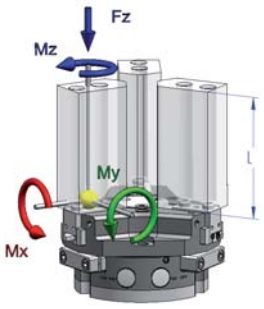

Clamping force diagram exterior gripping

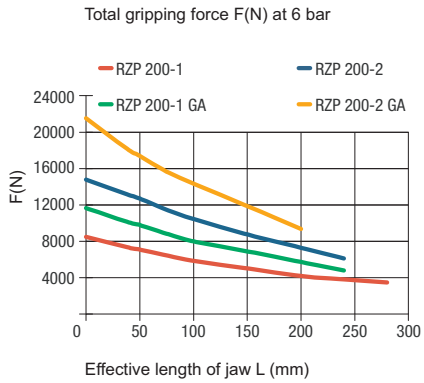

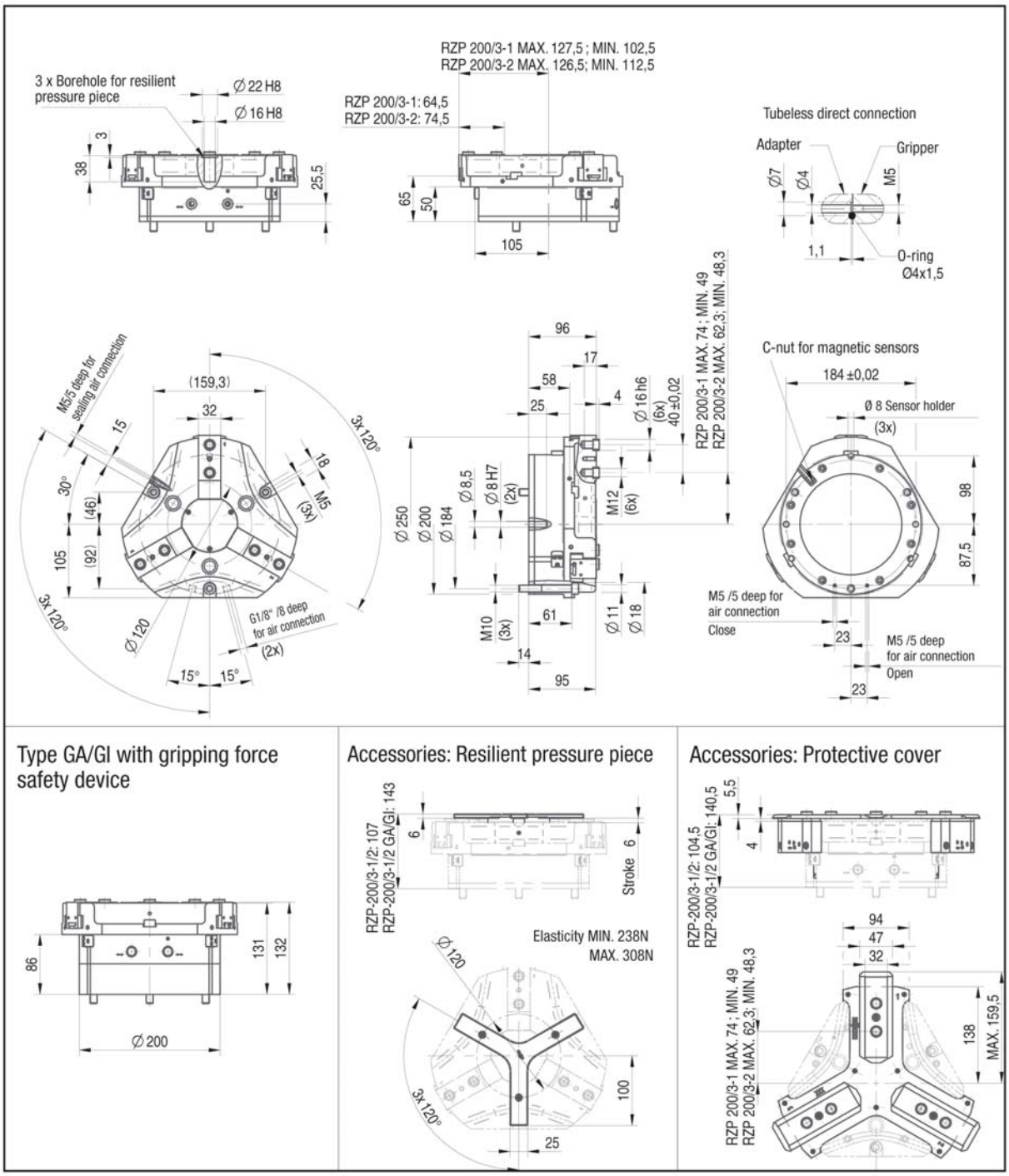

Centric gripper RZP

3-jaw centric gripper

RZP-240

APPLICATION

Universal gripping of round and cylindrical workpieces with three centrically arranged gripper fingers for handling with robots or portals.

TYPE

Available from sizes 64 to 300, each in two stroke variants. Optionally with gripping force safety device and/or dirt cover.
Fastening of the gripper fingers via centering sleeves (included in the scope of delivery).

CUSTOMER BENEFITS

- High gripping force with low dead weight and compact design
- High torque support for using long gripper fingers thanks to elongated jaw guide
- Maximum flexibility thanks to versatile connection and fastening options
- Long service life and high reliability thanks to specially ground base jaws in proven T-slot guide

TECHNICAL FEATURES

- Centrically clamping in compact design made of high-strength, hard-coated aluminium alloy
- All functional parts made of hardened steel for maximum service life
- Wedge hook principle with pneumatic actuation
- Optional inductive and magnetic position sensors
- Optionally available with FKM seals for higher temperatures up to 150°C (on request)
- Integrable purge air connection to prevent contamination

C40
RZP-240 - 3-jaw centric gripper air operated

Item No.	170086	170087 ▲	170088 ▲	170089 ▲	170090 ▲	170091 ▲
Design	RZP-240/3-1	RZP-240/3-2	RZP-240/3-1 GA	RZP-240/3-2 GA	RZP-240/3-1 GI	RZP-240/3-2 GI
Gripping force at 6 bar N	10500	18000	14000	24000	15000	25000
Stroke per jaw mm	30	17	30	17	30	17
Gripping force maintained N	-	-	3500	6000	3500	6000
Recommended workpiece weight kg	53	90	53	90	53	90
Weight kg	20	20	24	24	24	24
Height mm	128,1	128,1	171,5	171,5	171,5	171,5
Ø mm	290	290	290	290	290	290
Mx Nm	265	265	265	265	265	265
My Nm	250	250	250	250	250	250
Mz Nm	160	160	160	160	160	160
Fz N	6200	6200	6200	6200	6200	6200
Operating pressure min./max. without GA/GI bar	2-8	2-8	-	-	-	-
Operating pressure min./max. with GA/GI bar	-	-	4-7	4-7	4-7	4-7
Clamping time s	1,3	1,3	1,1	1,1	1,7	1,7
Opening time s	1,3	1,3	2,1	2,1	1,1	1,1
Air consumption per cycle cm^3	1700	1700	1700	1700	1700	1700
Max. allowable length of jaw mm	300	250	250	200	250	200

3-jaw centric gripper

RZP-240

Max. load on gripper and jaw

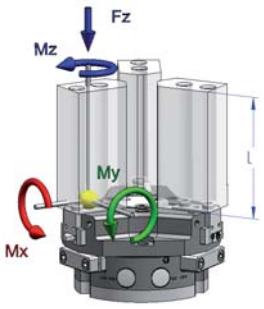

Clamping force diagram exterior gripping

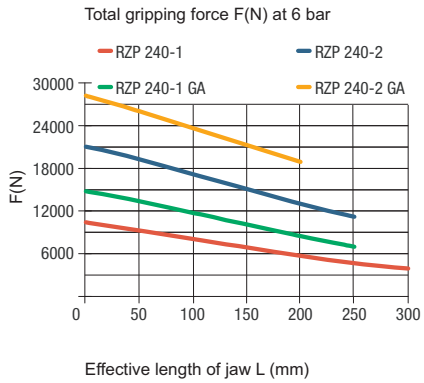

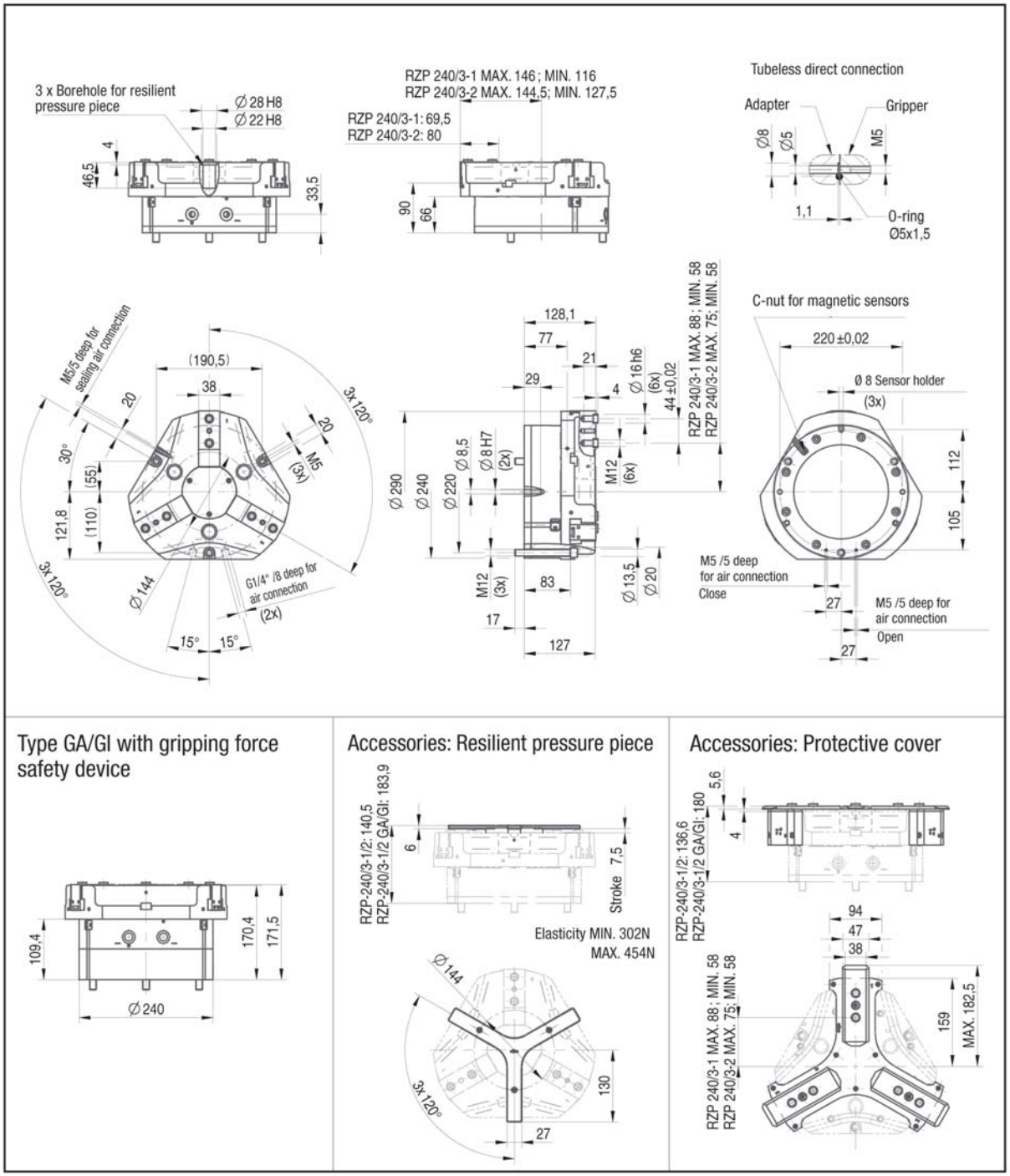

Centric gripper RZP

3-jaw centric gripper

RZP-300

APPLICATION

Universal gripping of round and cylindrical workpieces with three centrically arranged gripper fingers for handling with robots or portals.

TYPE

Available from sizes 64 to 300, each in two stroke variants. Optionally with gripping force safety device and/or dirt cover.
Fastening of the gripper fingers via centering sleeves (included in the scope of delivery).

CUSTOMER BENEFITS

- High gripping force with low dead weight and compact design
- High torque support for using long gripper fingers thanks to elongated jaw guide
- Maximum flexibility thanks to versatile connection and fastening options
- Long service life and high reliability thanks to specially ground base jaws in proven T-slot guide

TECHNICAL FEATURES

- Centrically clamping in compact design made of high-strength, hard-coated aluminium alloy
- All functional parts made of hardened steel for maximum service life
- Wedge hook principle with pneumatic actuation
- Optional inductive and magnetic position sensors
- Optionally available with FKM seals for higher temperatures up to 150°C (on request)
- Integrable purge air connection to prevent contamination

C40
RZP-300 - 3-jaw centric gripper air operated

Item No.	170092	170093 ▲	170094 ▲	170095 ▲	170096	170097 ▲
Design	RZP-300/3-1	RZP-300/3-2	RZP-300/3-1 GA	RZP-300/3-2 GA	RZP-300/3-1 GI	RZP-300/3-2 GI
Gripping force at 6 bar N	16000	28000	20000	37500	22500	38000
Stroke per jaw mm	35	20	35	20	35	20
Gripping force maintained N	-	-	6000	9500	6000	9500
Recommended workpiece weight kg	80	140	80	110	80	140
Weight kg	30	30	40	40	40	40
Height mm	146	146	196	196	196	196
Ø mm	345	345	345	345	345	345
Mx Nm	400	400	400	400	400	400
My Nm	400	400	400	400	400	400
Mz Nm	250	250	250	250	250	250
Fz N	8000	8000	8000	8000	8000	8000
Operating pressure min./max. without GA/GI bar	2-8	2-8	-	-	-	-
Operating pressure min./max. with GA/GI bar	-	-	4-7	4-7	4-7	4-7
Clamping time s	1,3	1,3	1,2	1,2	2	2
Opening time s	1,3	1,3	2,5	2,5	1,2	1,2
Air consumption per cycle cm^3	2700	2700	2700	2700	2700	2700
Max. allowable length of jaw mm	250	225	225	200	225	200

3-jaw centric gripper

RZP-300

Max. load on gripper and jaw

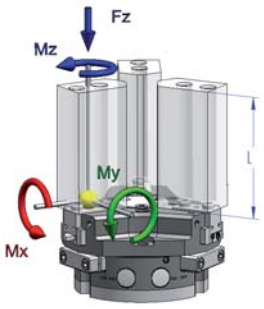

Clamping force diagram exterior gripping

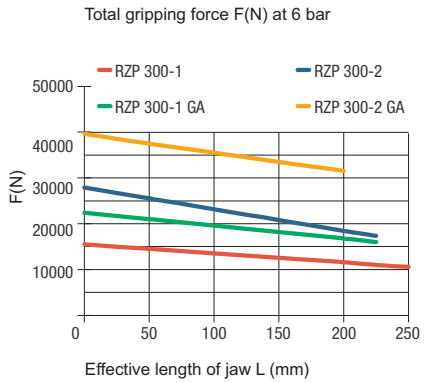

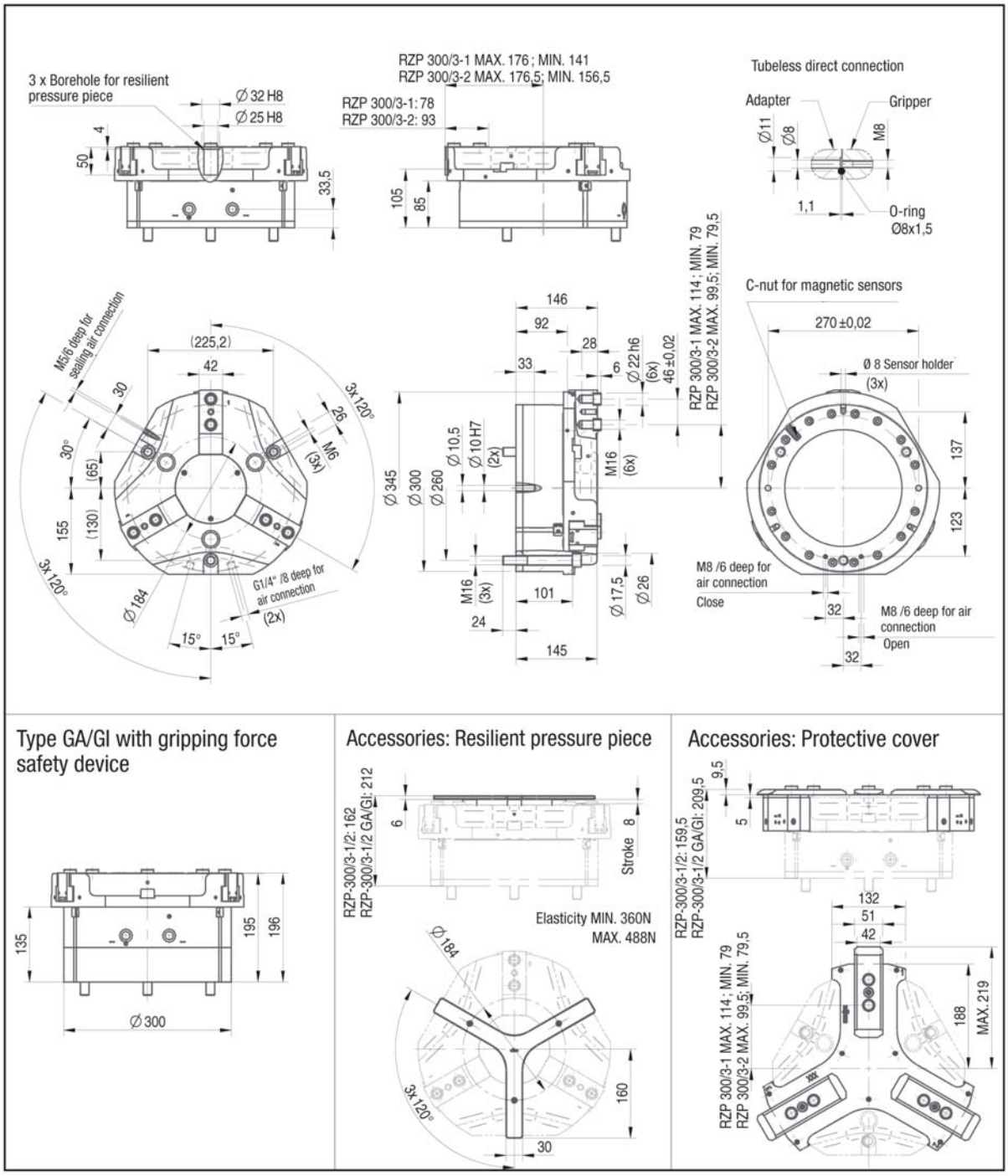

Centric gripper RZP

Accessories RZP

Jaw blank - aluminium (including fixing screws)
3-jaw set

Item no.	Number of jaws	Design	For
170550	3	aluminium	RZP-64
170552 ▲	3	aluminium	RZP-80
170554 ▲	3	aluminium	RZP-100
170556 ▲	3	aluminium	RZP-125
170558 ▲	3	aluminium	RZP-160
170560 ▲	3	aluminium	RZP-200
170562 ▲	3	aluminium	RZP-240
170564 ▲	3	aluminium	RZP-300

Jaw blank - steel (including fixing screws)
3-jaw set

Item no.	Number of jaws	Design	For
170500 ▲	3	steel	RZP-64
170502 ▲	3	steel	RZP-80
170504 ▲	3	steel	RZP-100
170506 ▲	3	steel	RZP-125
170508 ▲	3	steel	RZP-160
170510 ▲	3	steel	RZP-200
170512 ▲	3	steel	RZP-240
170514 ▲	3	steel	RZP-300

Protective cover

Item no.	For
170810 ▲	RZP-64
170811 ▲	RZP-80
170812 ▲	RZP-100
170813	RZP-125
170814	RZP-160
170815 ▲	RZP-200
170816 ▲	RZP-240
170817 ▲	RZP-300

Resilient pressure piece

Item no.	For
170516 ▲	RZP-64
170517 ▲	RZP-80
170518 ▲	RZP-100
170519 ▲	RZP-125
170520 ▲	RZP-160
170521 ▲	RZP-200
170522 ▲	RZP-240
170523 ▲	RZP-300

Pressure maintenance
for double acting gripper (G1/8)

Item no.
1078823

Compressed air connection - L-Plug connector

Item no.	Design	For
802539	L-Plug connector M5 - 6 mm	RPP-50 / RPP-64 / RPP-80
477025	L-Plug connector 1/8 - 6 mm	RPP-100 - RPP-240
477024 ▲	L-Plug connector 1/4 - 6 mm	RPP-300 / RPP-380

Proximity switch

Item no.	Size (diameter/ length)	Design	For
229114	M8x1x30,5	5 m cable, open leads	RZP-64/-80/-100/-125/-160
389661	M8x1x46,5	3 m cable, open leads	RZP-200/-240/-300

Magnetic field sensors

Item no.	Size (diameter/ length)	Design	For
1231970	C-Nut	30 cm cable, plug M8x1-S49	all sizes, all types

Accessories RZP

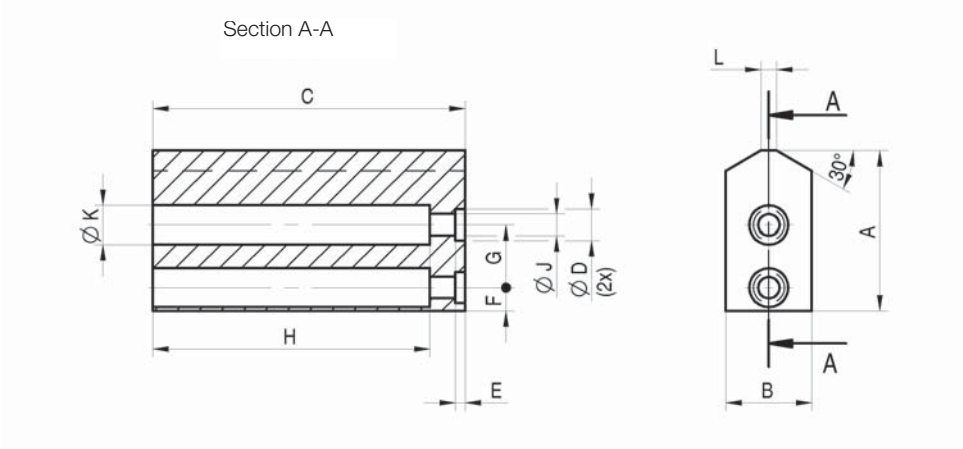

Jaw blank - steel (including fixing screws)

RPP / RZP	64	80	100	125	160	200	240	300
RPP - 2-jaw set	**170575**	**170576**	**170577**	**170578**	**170579**	**170580**	**170581**	**170582**
RZP - 3-jaw set	**170500**	**170502**	**170504**	**170506**	**170508**	**170510**	**170512**	**170514**
A	32	41	51	60	80	96	109	130
B	20	22	30	35	40	40	50	60
C	64	80	100	125	160	200	220	200
D +0,04/+0,02	6	8	10	10	14	16	16	22
E+0,2	2,5	2,5	3	3	4	4	4	6
F±0,1	5	6	7	9,5	10	15	15,5	20
G±0,1	13	16	20	24	32	40	44	46
H	57	71	91	115	146	181	204	177
J	4,5	5,5	6,6	6,6	11	13,5	13,5	17,5
K	8	10	11	11	18	20	20	26
L	3	4	5	6	8	13	10	16
Weight per jaw kg	0,25	0,45	1,0	1,75	3,2	5,0	8,0	10,2

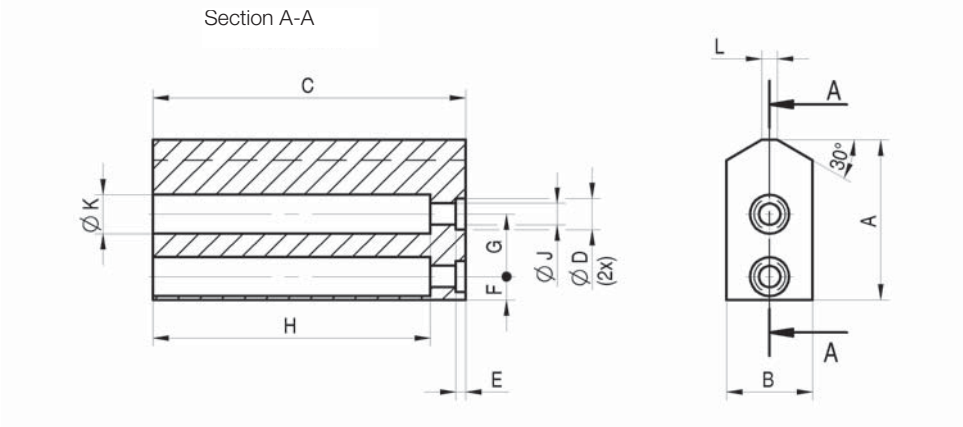

Jaw blank - aluminium (including fixing screws)

RPP / RZP	64	80	100	125	160	200	240	300
RPP - 2-jaw set	**170585**	**170586**	**170587**	**170588**	**170589**	**170590**	**170591**	**170592**
RZP - 3-jaw set	**170550**	**170552**	**170554**	**170556**	**170558**	**170560**	**170562**	**170564**
A	32	41	51	60	80	96	109	130
B	20	25	30	35	40	45	50	60
C	64	80	100	125	160	200	220	200
D +0,04/+0,02	6	8	10	10	14	16	16	22
E+0,2	2,5	2,5	3	3	4	4	4	6
F±0,1	5	6	7	9,5	10	15	15,5	20
G±0,1	13	16	20	24	32	40	44	46
H	55	69	88	112	141	176	200	170
J	4,5	5,5	6,6	6,6	11	13,5	13,5	17,5
K	8	10	11	11	18	20	20	26
L	3	4	5	6	8	9	10	16
Weight per jaw kg	0,1	0,18	0,35	0,6	1,2	2,0	2,8	3,4

3-jaw centric gripper

RZP-A 64

APPLICATION

Universal gripping of round and cylindrical workpieces with three centrically arranged gripper fingers for handling with robots or portals.

TYPE

Available from sizes 64 to 160, each in two stroke variants. Optionally with gripping force safety device and/or dirt cover.
Fastening of the gripper fingers via centering sleeves (included in the scope of delivery).

CUSTOMER BENEFITS

- High gripping force with low dead weight and compact design
- Maximum flexibility thanks to versatile connection and fastening options
- Long service life and high reliability thanks to specially ground base jaws in proven T-slot guide

TECHNICAL FEATURES

- Centrically clamping in compact design made of high-strength, hard-coated aluminium alloy
- All functional parts made of hardened steel for maximum service life
- Wedge hook principle with pneumatic actuation
- Optional inductive and magnetic position sensors
- Optionally available with FKM seals for higher temperatures up to 150°C (on request)
- Integrable purge air connection to prevent contamination

C40
RZP-A 64 - 3-jaw centric gripper air operated with tongue and groove

Item No.	436958 ▲	436959 ▲	436960 ▲	436961 ▲	436962 ▲	436963 ▲
Design	RZP-A 64/3-1	RZP-A 64/3-2	RZP-A 64/3-1 GA	RZP-A 64/3-2 GA	RZP-A 64/3-1 GI	RZP-A 64/3-2 GI
Gripping force at 6 bar N	700	1350	880	1700	1000	1900
Stroke per jaw mm	6	3	6	3	6	3
Gripping force maintained N	-	-	180	350	180	350
Recommended workpiece weight kg	3,5	6,5	3,5	6,5	3,5	6,5
Weight kg	0,4	0,4	0,5	0,5	0,5	0,5
Height mm	42	42	55,5	55,5	55,5	55,5
Ø mm	64	64	64	64	64	64
Mx Nm	15	15	15	15	15	15
My Nm	30	30	30	30	30	30
Mz Nm	25	25	25	25	25	25
Fz N	1400	1400	1400	1400	1400	1400
Operating pressure min./max. without GA/GI bar	2-8	2-8	-	-	-	-
Operating pressure min./max. with GA/GI bar	-	-	4-7	4-7	4-7	4-7
Clamping time s	0,01	0,01	0,03	0,03	0,04	0,04
Opening time s	0,01	0,01	0,04	0,04	0,03	0,03
Air consumption per cycle cm^3	25	25	25	25	25	25
Max. allowable length of jaw mm	64	64	64	64	64	64

RZP-A 64

Max. load on gripper and jaw

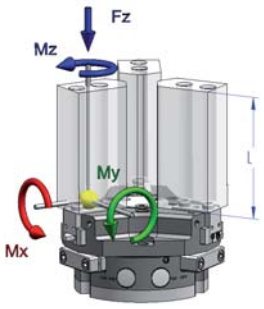

Clamping force diagram exterior gripping

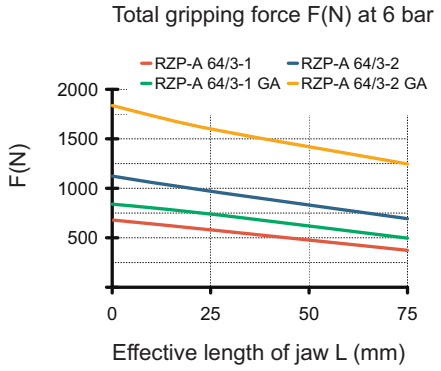

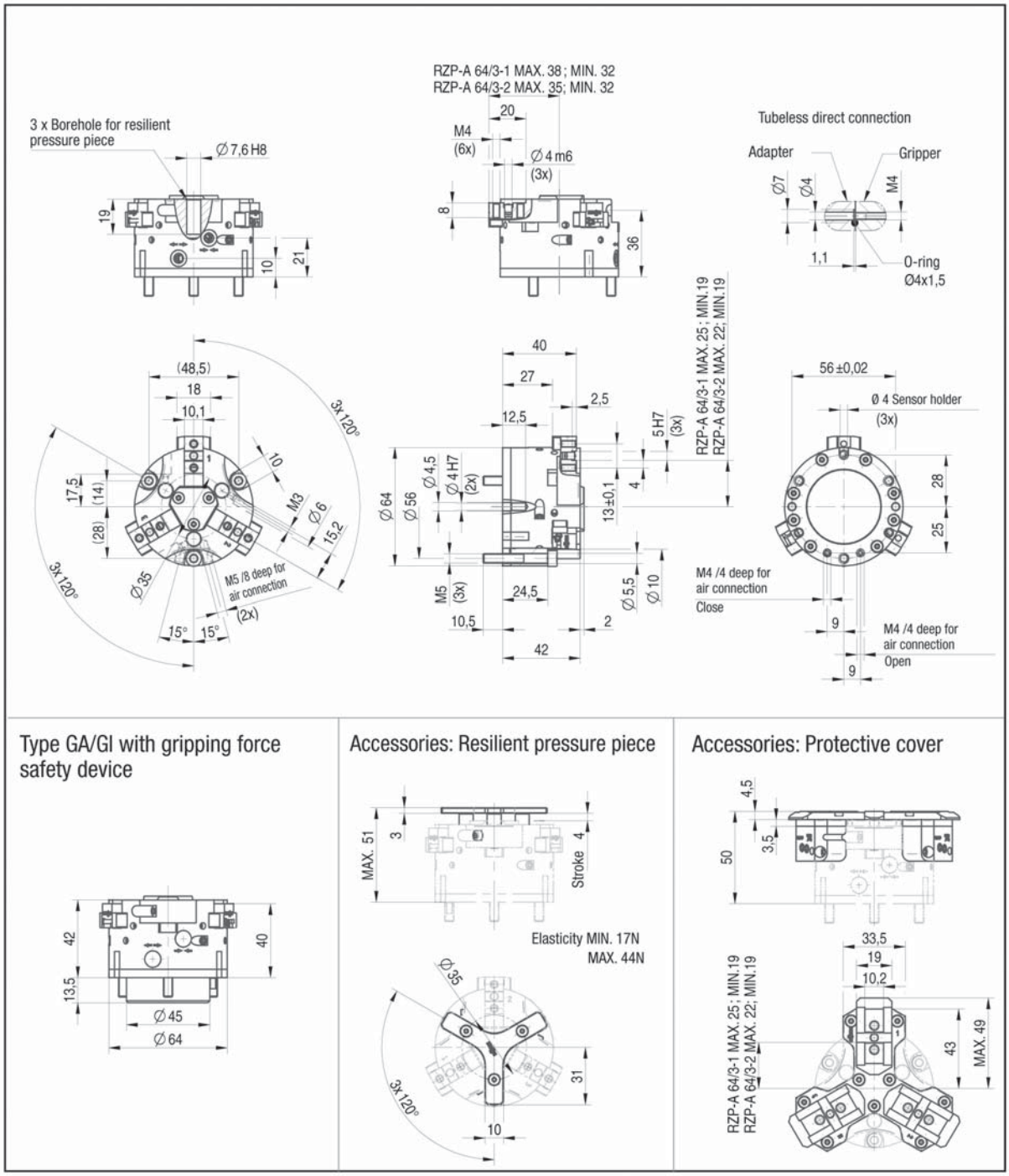

3-jaw centric gripper

RZP-A 80

APPLICATION

Universal gripping of round and cylindrical workpieces with three centrically arranged gripper fingers for handling with robots or portals.

TYPE

Available from sizes 64 to 160, each in two stroke variants. Optionally with gripping force safety device and/or dirt cover.
Fastening of the gripper fingers via centering sleeves (included in the scope of delivery).

CUSTOMER BENEFITS

- High gripping force with low dead weight and compact design
- Maximum flexibility thanks to versatile connection and fastening options
- Long service life and high reliability thanks to specially ground base jaws in proven T-slot guide

TECHNICAL FEATURES

- Centrically clamping in compact design made of high-strength, hard-coated aluminium alloy
- All functional parts made of hardened steel for maximum service life
- Wedge hook principle with pneumatic actuation
- Optional inductive and magnetic position sensors
- Optionally available with FKM seals for higher temperatures up to 150°C (on request)
- Integrable purge air connection to prevent contamination

C40
RZP-A 80 - 3-jaw centric gripper air operated with tongue and groove

Item No.	434833 ▲	435042 ▲	434837 ▲	435043 ▲	434838 ▲	435044 ▲
Design	RZP-A 80/3-1	RZP-A 80/3-2	RZP-A 80/3-1 GA	RZP-A 80/3-2 GA	RZP-A 80/3-1 GI	RZP-A 80/3-2 GI
Gripping force at 6 bar N	1000	2500	1600	3400	1700	3500
Stroke per jaw mm	8	4	8	4	8	4
Gripping force maintained N	-	-	350	700	350	700
Recommended workpiece weight kg	5	12	5	12	5	12
Weight kg	0,75	0,75	0,95	0,95	0,95	0,95
Height mm	48	48	63	63	63	63
Ø mm	80	80	80	80	80	80
Mx Nm	30	30	30	30	30	30
My Nm	90	90	90	90	90	90
Mz Nm	35	35	35	35	35	35
Fz N	1800	1800	1800	1800	1800	1800
Operating pressure min./max. without GA/GI bar	2-8	2-8	-	-	-	-
Operating pressure min./max. with GA/GI bar	-	-	4-7	4-7	4-7	4-7
Clamping time s	0,06	0,06	0,05	0,05	0,08	0,08
Opening time s	0,05	0,05	0,08	0,08	0,05	0,05
Air consumption per cycle cm^3	60	60	60	60	60	60
Max. allowable length of jaw mm	80	80	80	80	80	80

3-jaw centric gripper

RZP-A 80

Max. load on gripper and jaw

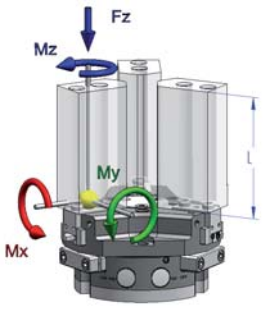

Clamping force diagram exterior gripping

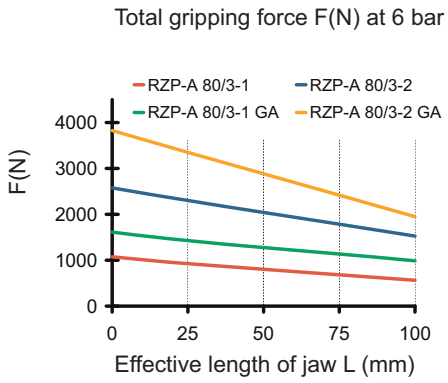

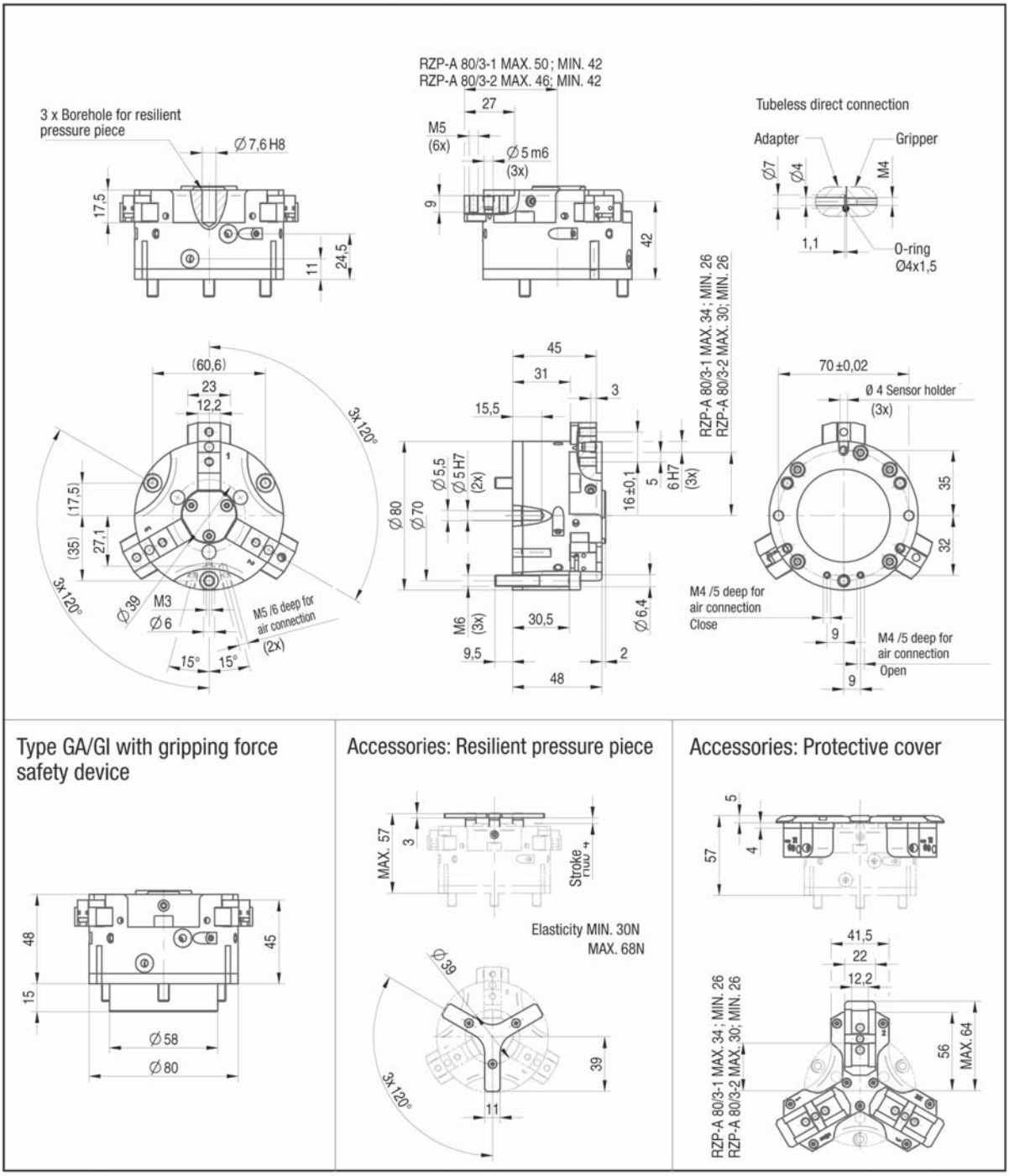

3-jaw centric gripper

RZP-A 100

APPLICATION

Universal gripping of round and cylindrical workpieces with three centrically arranged gripper fingers for handling with robots or portals.

TYPE

Available from sizes 64 to 160, each in two stroke variants. Optionally with gripping force safety device and/or dirt cover.
Fastening of the gripper fingers via centering sleeves (included in the scope of delivery).

CUSTOMER BENEFITS

- High gripping force with low dead weight and compact design
- Maximum flexibility thanks to versatile connection and fastening options
- Long service life and high reliability thanks to specially ground base jaws in proven T-slot guide

TECHNICAL FEATURES

- Centrically clamping in compact design made of high-strength, hard-coated aluminium alloy
- All functional parts made of hardened steel for maximum service life
- Wedge hook principle with pneumatic actuation
- Optional inductive and magnetic position sensors
- Optionally available with FKM seals for higher temperatures up to 150°C (on request)
- Integrable purge air connection to prevent contamination

C40
RZP-A 100 - 3-jaw centric gripper air operated with tongue and groove

Item No.	434891 ▲	434892 ▲	434900 ▲	434840 ▲	434839 ▲	434901 ▲
Design	RZP-A 100/3-1	RZP-A 100/3-2	RZP-A 100/3-1 GA	RZP-A 100/3-2 GA	RZP-A 100/3-1 GI	RZP-A 100/3-2 GI
Gripping force at 6 bar N	2000	4000	2500	5000	2650	5100
Stroke per jaw mm	10	5	10	5	10	5
Gripping force maintained N	-	-	500	1000	500	1000
Recommended workpiece weight kg	10	20	10	20	10	20
Weight kg	1,3	1,3	1,9	1,9	1,9	1,9
Height mm	58	58	78	78	78	78
Ø mm	100	100	100	100	100	100
Mx Nm	45	45	45	45	45	45
My Nm	95	95	95	95	95	95
Mz Nm	45	45	45	45	45	45
Fz N	2300	2300	2300	2300	2300	2300
Operating pressure min./max. without GA/GI bar	2-8	2-8	-	-	-	-
Operating pressure min./max. with GA/GI bar	-	-	4-7	4-7	4-7	4-7
Clamping time s	0,1	0,1	0,1	0,1	0,2	0,2
Opening time s	0,1	0,1	0,2	0,2	0,1	0,1
Air consumption per cycle cm^3	120	120	120	120	120	120
Max. allowable length of jaw mm	100	100	100	100	100	100

3-jaw centric gripper

RZP-A 100

Max. load on gripper and jaw

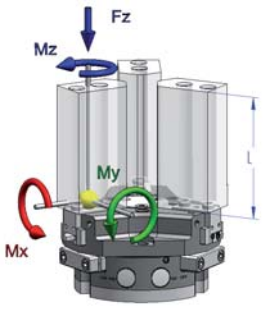

Clamping force diagram exterior gripping

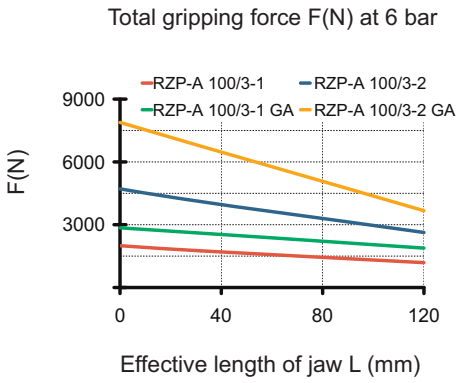

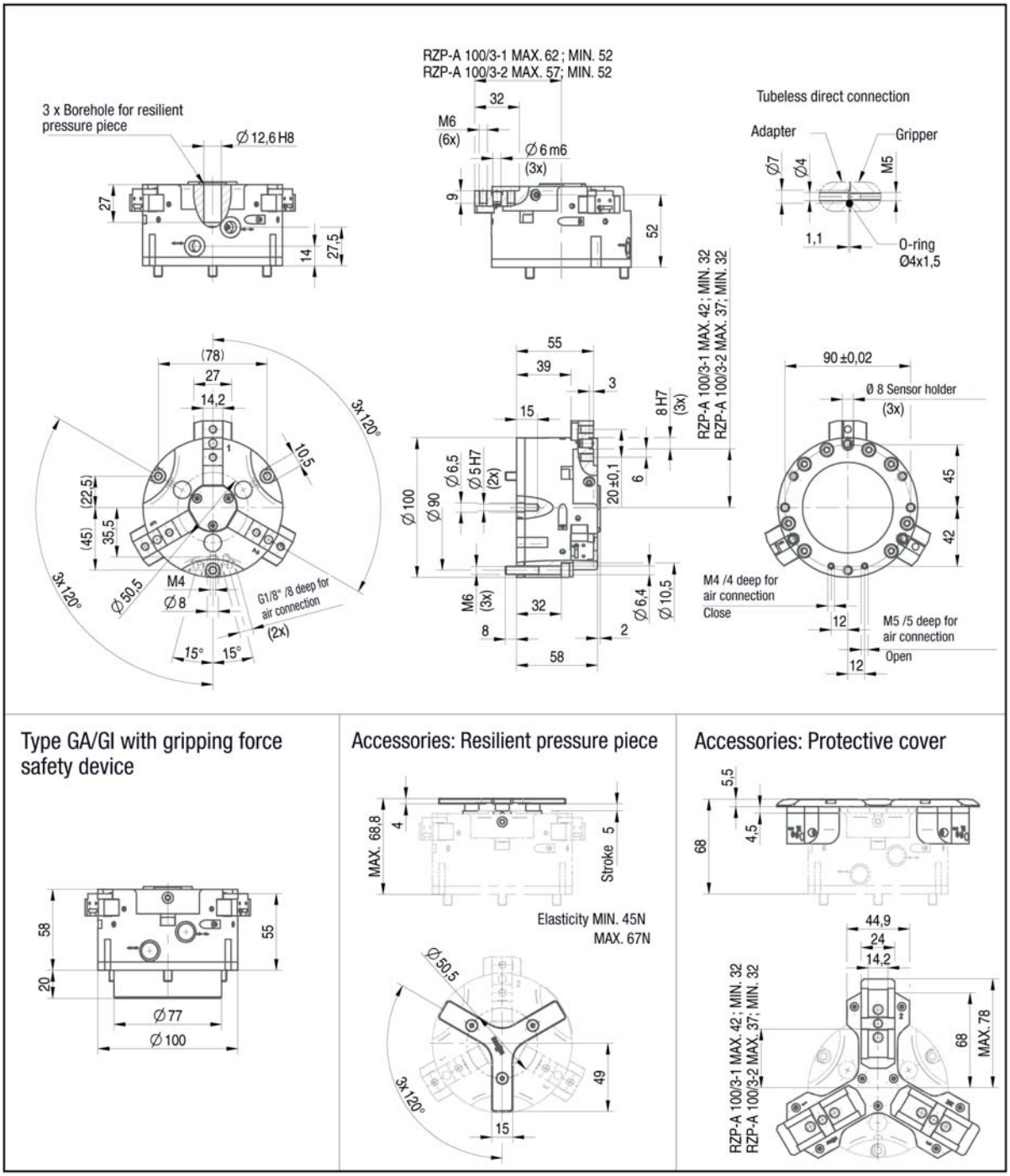

3-jaw centric gripper

RZP-A 125

APPLICATION

Universal gripping of round and cylindrical workpieces with three centrically arranged gripper fingers for handling with robots or portals.

TYPE

Available from sizes 64 to 160, each in two stroke variants. Optionally with gripping force safety device and/or dirt cover.
Fastening of the gripper fingers via centering sleeves (included in the scope of delivery).

CUSTOMER BENEFITS

- High gripping force with low dead weight and compact design
- Maximum flexibility thanks to versatile connection and fastening options
- Long service life and high reliability thanks to specially ground base jaws in proven T-slot guide

TECHNICAL FEATURES

- Centrically clamping in compact design made of high-strength, hard-coated aluminium alloy
- All functional parts made of hardened steel for maximum service life
- Wedge hook principle with pneumatic actuation
- Optional inductive and magnetic position sensors
- Optionally available with FKM seals for higher temperatures up to 150°C (on request)
- Integrable purge air connection to prevent contamination

C40
RZP-A 125 - 3-jaw centric gripper air operated with tongue and groove

Item No.	434841 ▲	434902 ▲	434842 ▲	434914 ▲	434843 ▲	434915 ▲
Design	RZP-A 125/3-1	RZP-A 125/3-2	RZP-A 125/3-1 GA	RZP-A 125/3-2 GA	RZP-A 125/3-1 GI	RZP-A 125/3-2 GI
Gripping force at 6 bar N	3300	6500	4200	8100	4300	8300
Stroke per jaw mm	13	6	13	6	13	6
Gripping force maintained N	-	-	900	1600	800	1600
Recommended workpiece weight kg	16	32	16	32	16	32
Weight kg	2,3	2,3	3,4	3,4	3,4	3,4
Height mm	66	66	80,5	80,5	80,5	80,5
Ø mm	125	125	125	125	125	125
Mx Nm	60	60	60	60	60	60
My Nm	100	100	100	100	100	100
Mz Nm	70	70	70	70	70	70
Fz N	2500	2500	2500	2500	2500	2500
Operating pressure min./max. without GA/GI bar	2-8	2-8	-	-	-	-
Operating pressure min./max. with GA/GI bar	-	-	4-7	4-7	4-7	4-7
Clamping time s	0,2	0,2	0,15	0,15	0,35	0,35
Opening time s	0,2	0,2	0,35	0,35	0,15	0,15
Air consumption per cycle cm^3	230	230	230	230	230	230
Max. allowable length of jaw mm	125	125	125	125	125	125

RZP-A 125

Max. load on gripper and jaw

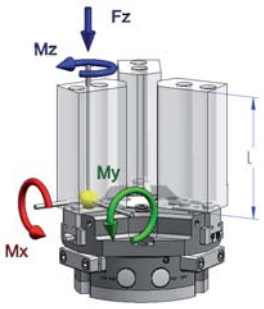

Clamping force diagram exterior gripping

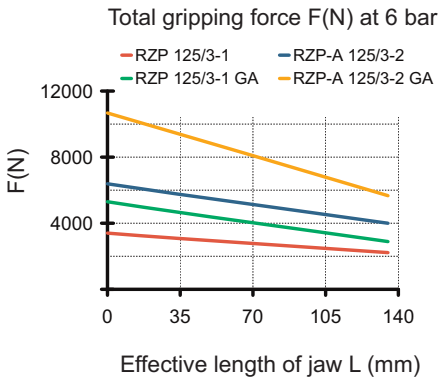

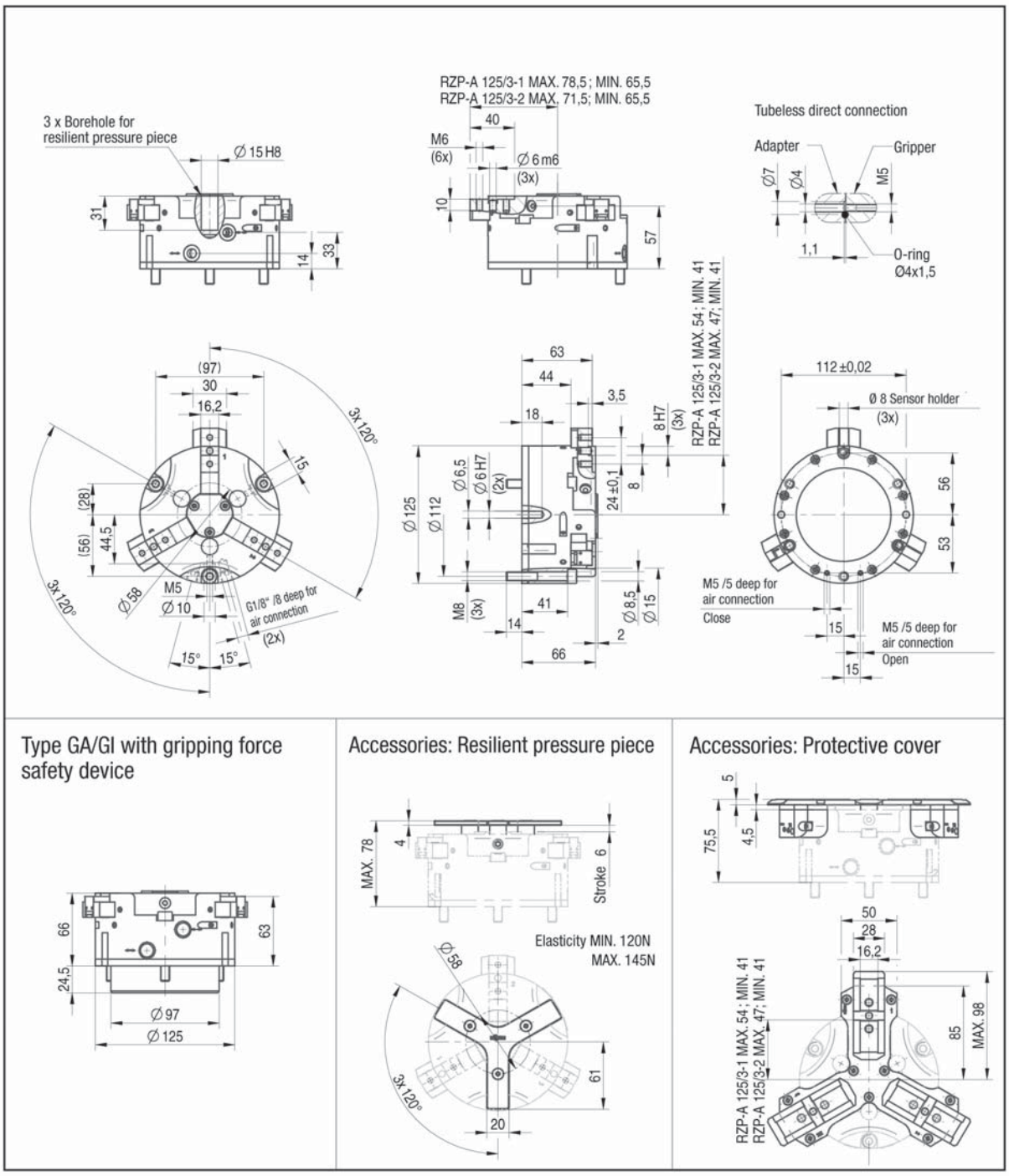

3-jaw centric gripper

RZP-A 160

APPLICATION

Universal gripping of round and cylindrical workpieces with three centrically arranged gripper fingers for handling with robots or portals.

TYPE

Available from sizes 64 to 160, each in two stroke variants. Optionally with gripping force safety device and/or dirt cover.
Fastening of the gripper fingers via centering sleeves (included in the scope of delivery).

CUSTOMER BENEFITS

- High gripping force with low dead weight and compact design
- Maximum flexibility thanks to versatile connection and fastening options
- Long service life and high reliability thanks to specially ground base jaws in proven T-slot guide

TECHNICAL FEATURES

- Centrically clamping in compact design made of high-strength, hard-coated aluminium alloy
- All functional parts made of hardened steel for maximum service life
- Wedge hook principle with pneumatic actuation
- Optional inductive and magnetic position sensors
- Optionally available with FKM seals for higher temperatures up to 150°C (on request)
- Integrable purge air connection to prevent contamination

C40
RZP-A 160 - 3-jaw centric gripper air operated with tongue and groove

Item No.	435045 ▲	435046 ▲	435055 ▲	435056 ▲	435057 ▲	435058 ▲
Design	RZP-A 160/3-1	RZP-A 160/3-2	RZP-A 160/3-1 GA	RZP-A 160/3-2 GA	RZP-A 160/3-1 GI	RZP-A 160/3-2 GI
Gripping force at 6 bar N	6000	12000	8000	16000	8500	16500
Stroke per jaw mm	16	8	16	8	16	8
Gripping force maintained N	-	-	2000	4000	2000	4000
Recommended workpiece weight kg	30	60	30	60	30	60
Weight kg	4,5	4,5	6,6	6,6	6,6	6,6
Height mm	78	78	108	108	108	108
Ø mm	160	160	160	160	160	160
Mx Nm	80	80	80	80	80	80
My Nm	100	100	100	100	100	100
Mz Nm	80	80	80	80	80	80
Fz N	2800	2800	2800	2800	2800	2800
Operating pressure min./max. without GA/GI bar	2-8	2-8	-	-	-	-
Operating pressure min./max. with GA/GI bar	-	-	4-7	4-7	4-7	4-7
Clamping time s	0,4	0,4	0,4	0,4	0,8	0,8
Opening time s	0,4	0,4	0,8	0,8	0,4	0,4
Air consumption per cycle cm^3	520	520	520	520	520	520
Max. allowable length of jaw mm	160	160	160	160	160	160

3-jaw centric gripper

RZP-A 160

Max. load on gripper and jaw

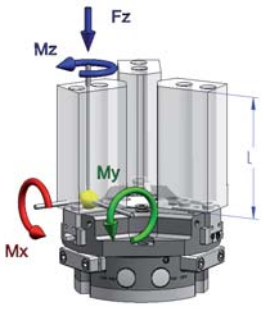

Clamping force diagram exterior gripping

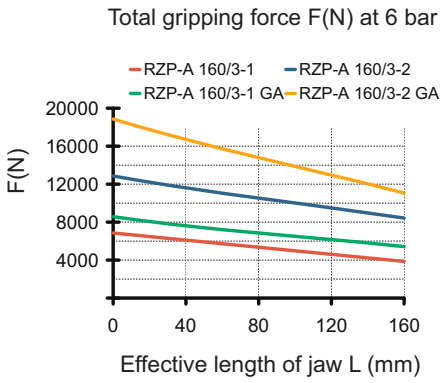

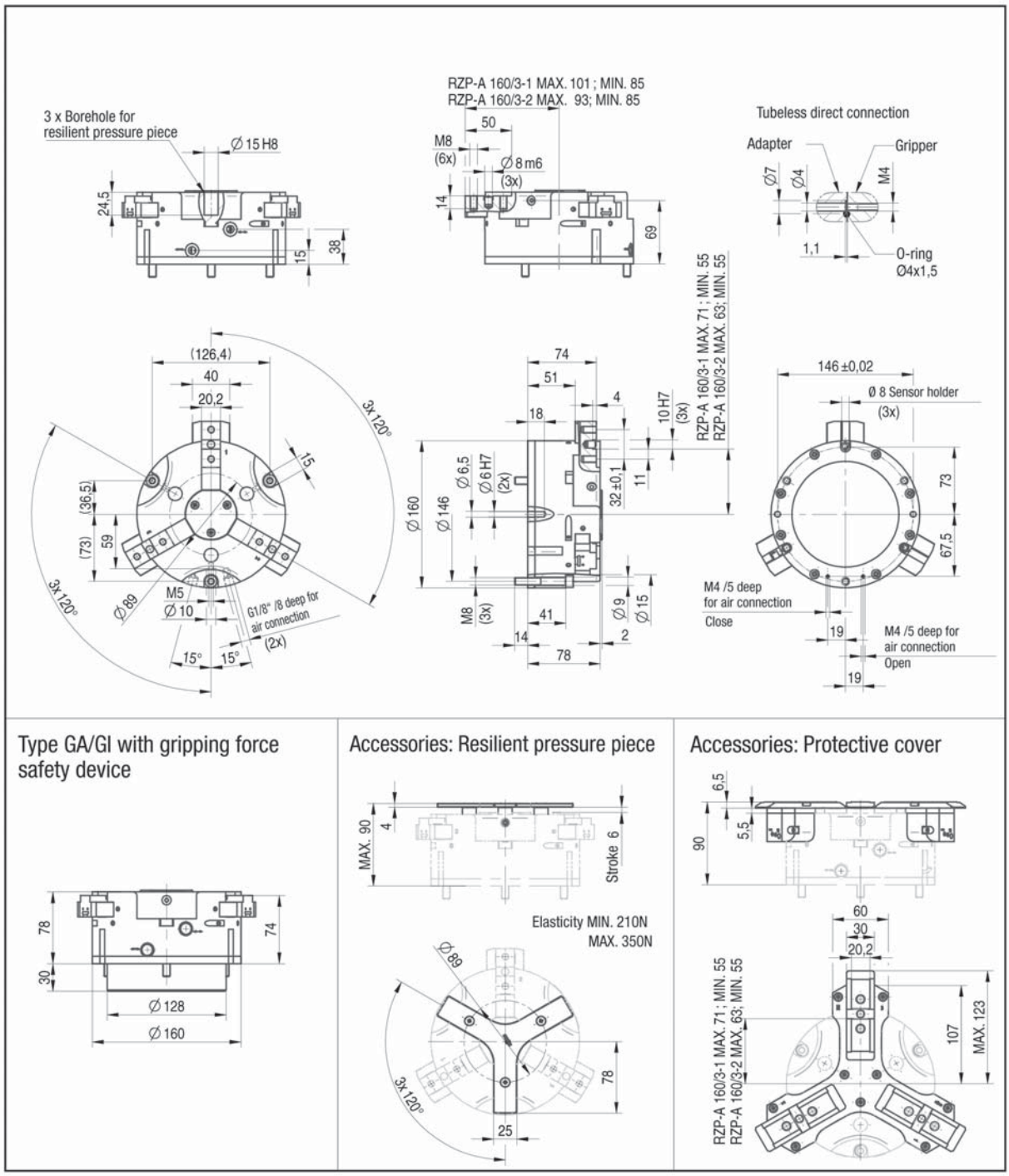

Accessories RZP-A

Jaw blank - steel (including fixing screws)
3-jaw set

Item no.	Number of jaws	Design	For
170825 ▲	3	steel	RZP-A 64
170826 ▲	3	steel	RZP-A 80
170827 ▲	3	steel	RZP-A 100
170828 ▲	3	steel	RZP-A 125
170829 ▲	3	steel	RZP-A 160

Jaw blank - aluminium (including fixing screws)
3-jaw set

Item no.	Number of jaws	Design	For
170835 ▲	3	aluminium	RZP-A 64
170836 ▲	3	aluminium	RZP-A 80
170837 ▲	3	aluminium	RZP-A 100
170838 ▲	3	aluminium	RZP-A 125
170839 ▲	3	aluminium	RZP-A 160

Resilient pressure piece

Item no.	For
165573 ▲	RZP-A 64
170868 ▲	RZP-A 80
170870 ▲	RZP-A 100
170871 ▲	RZP-A 125
170872 ▲	RZP-A 160

Pressure maintenance
for double acting gripper (G1/8)

Item no.
1078823

Compressed air connection - L-Plug connector

Item no.	Design	For
802539	L-Plug connector M5 - 6 mm	RPP-50 / RPP-64 / RPP-80
477025	L-Plug connector 1/8 - 6 mm	RPP-100 - RPP-240

Proximity switch

Item no.	Size (diameter/ length)	Design	For
229114	M8x1x30,5	5 m cable, open leads	RZP-A 64/ RZP-A-160

Accessories RZP-A

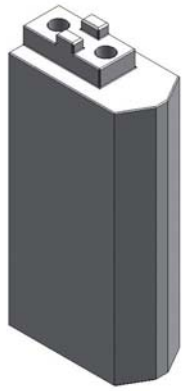

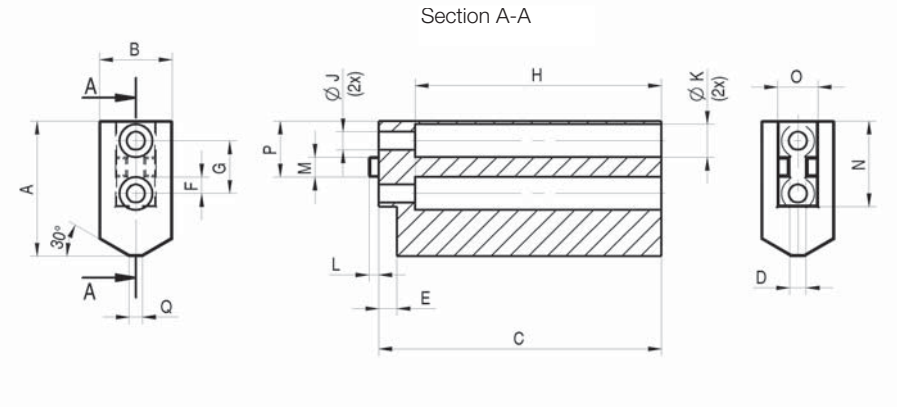

Jaw blank - steel (including fixing screws)

RPP-A / RZP-A Jaw blank - steel	64	80	100	125	160
RPP-A - 2-jaw set	**170675**	**170676**	**170677**	**170678**	**170679**
RZP-A - 3-jaw set	**170825**	**170826**	**170827**	**170828**	**170829**
A	32	41	51	60	80
B	20	22	30	35	40
C	68,5	85,5	105,5	130,5	166,5
D +0,01/+0,03	4	5	6	6	8
E+0,2	4,5	5,5	5,5	5,5	6,5
F±0,1	4	5	6	8	11
G±0,1	13	16	20	24	32
H	59,5	74,5	94,5	119,5	153,5
J	4,5	5,5	6,6	6,6	9
K	8	10	11	11	15
L	2,5	3	3	3,5	4
Mf7	5	6	8	8	10
N-0,3/-0,5	21	26	33	41	51
O-0,3/-0,5	10,2	12,2	14,2	16,2	20,2
P+0,1	14	17	21	25,5	31
Q	3	4	5	6	8
Weight per jaw kg	0,26	0,46	1,0	1,8	3,5

Accessories RZP-A

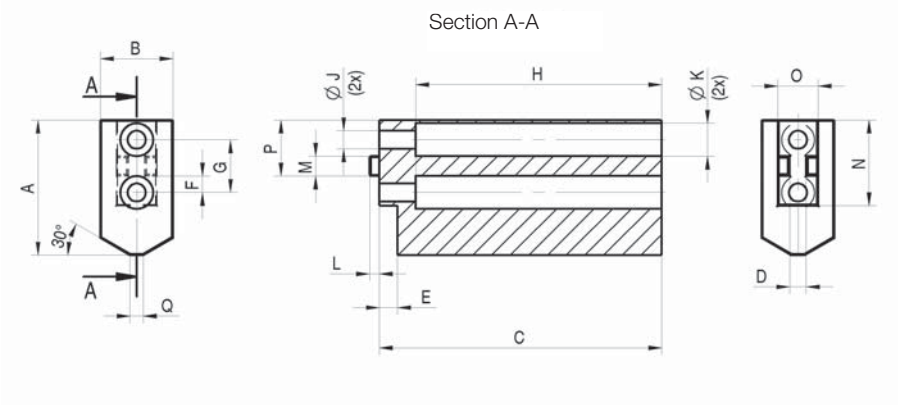

Jaw blank - aluminium (including fixing screws)

RPP-A / RZP-A Jaw blank - aluminium	64	80	100	125	160
RPP-A - 2-jaw set	**170685**	**170686**	**170687**	**170688**	**170689**
RZP-A - 3-jaw set	**170835**	**170836**	**170837**	**170838**	**170839**
A	32	41	51	60	80
B	20	22	30	35	40
C	68,5	85,5	105,5	130,5	166,5
D +0,01/+0,03	4	5	6	6	8
E+0,2	4,5	5,5	5,5	5,5	6,5
F±0,1	4	5	6	8	11
G±0,1	13	16	20	24	32
H	59,5	74,5	94,5	119,5	153,5
J	4,5	5,5	6,6	6,6	9
K	8	10	11	11	15
L	2,5	3	3	3,5	4
Mf7	5	6	8	8	10
N-0,3/-0,5	21	26	33	41	51
O-0,3/-0,5	10,2	12,2	14,2	16,2	20,2
P+0,1	14	17	21	25,5	31
Q	3	4	5	6	8
Weight per jaw kg	0,1	0,16	0,35	0,62	1,2

Notes

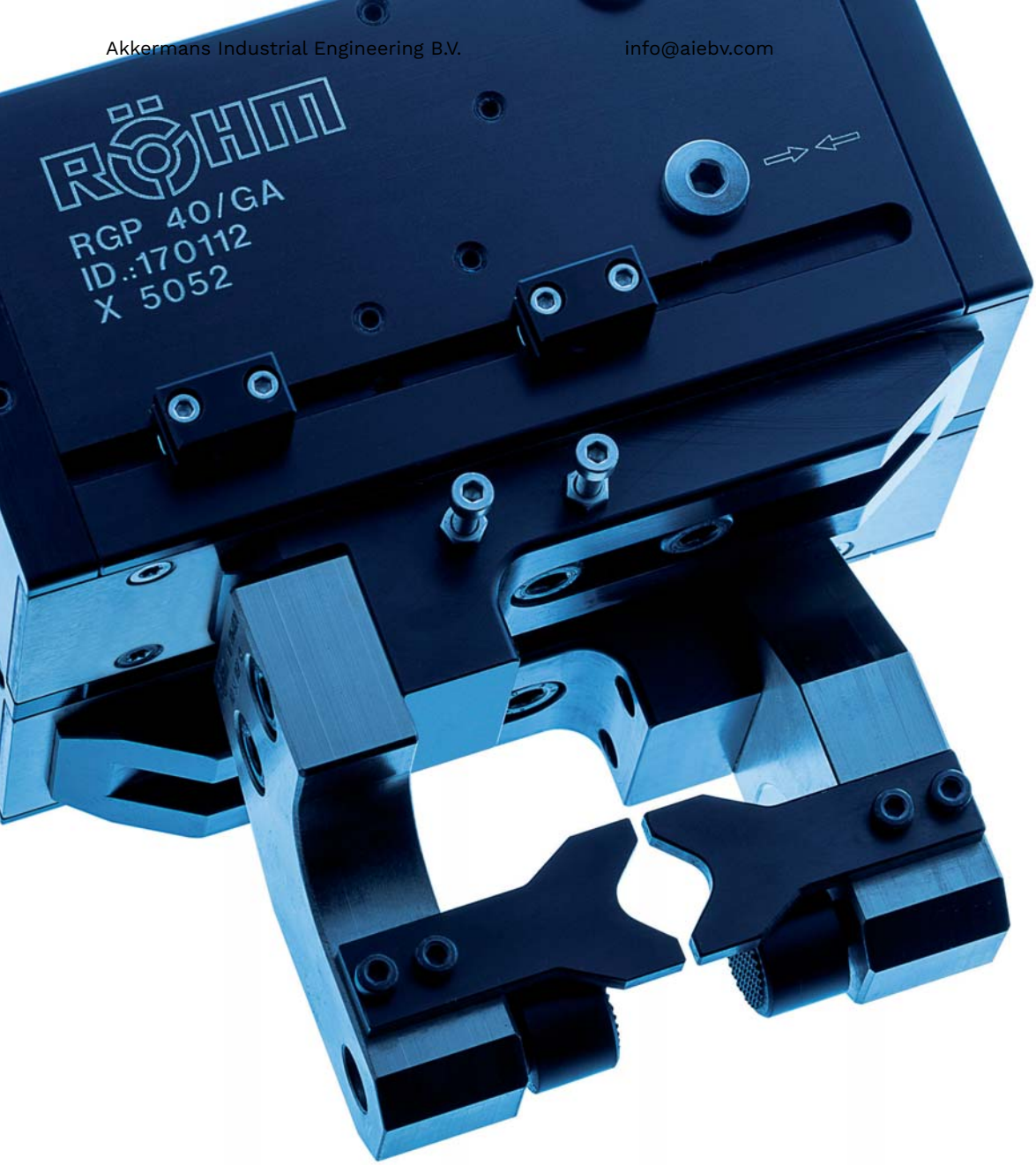

NOMENCLATURE

RGP	O	- 100	/ GA	/ V
RÖHM **G** long stroke gripper **P**neumatic (sealed version)	**O =** Open version for longer jaw stroke	**Sizes** RGP: 30-50 RGPO: 40-60	Optional: spring safety **GA** = outside grip	Optional: **V** = Viton FKM-sealing for temperatures up to 150 °C

2-JAW LONG STROKE GRIPPER

The 2-jaw long stroke gripper allows for large jaw strokes, thanks to its design, and is therefore optimally suited for handling large parts and a high part diversity. Due to the sealed guide, it is often used in rough environments. The centric clamping is realized via the synchronization of the two toothed racks with a gear wheel.

ADVANTAGES AT A GLANCE

- High gripping force with simultaneously high jaw stroke by means of double-acting pressure pistons
- High torque support for using long gripper fingers by means of robust flat guide
- Sealed for rough ambient conditions with quad-ring seal and highly precise intermediate jaws

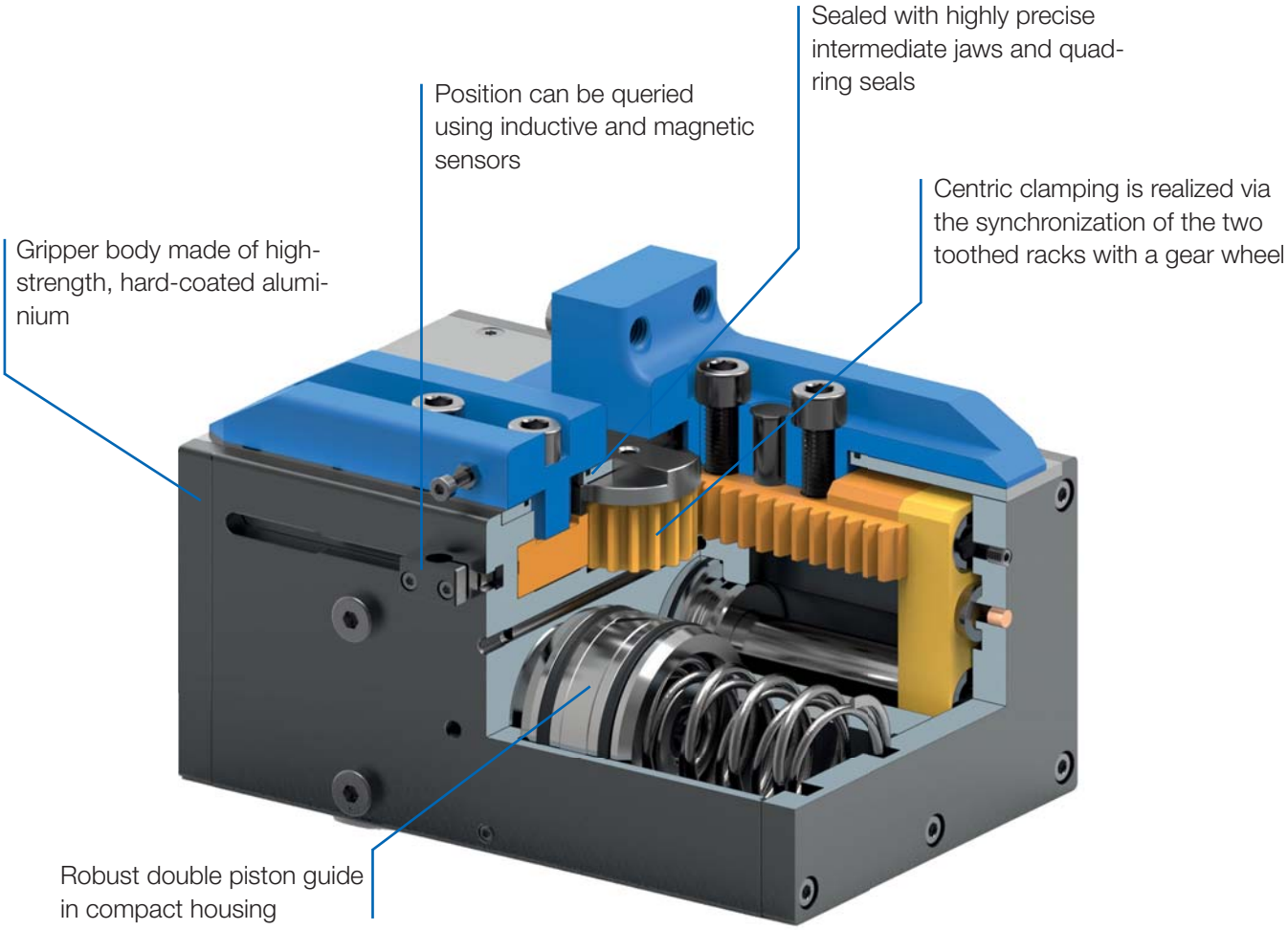

2-jaw long stroke gripper

RGP-30

APPLICATION

Sealed large-stroke gripper for handling large parts and high part variety.

TYPE

Available in sizes 30, 40 and 50 with integrated seal - optionally with gripping force securing device.
High precision thanks to double-piston drive synchronized via gear wheel.

CUSTOMER BENEFITS

- High gripping force with simultaneously high jaw stroke by means of double-acting pressure pistons
- High torque support for using long gripper fingers thanks to elongated jaw guide
- Sealed for rough ambient conditions with quad-ring seal and highly precise intermediate jaws
- Maximum flexibility thanks to versatile connection and fastening options

TECHNICAL FEATURES

- Centrically clamping in compact design made of high-strength, hard-coated aluminium alloy
- All functional parts made of hardened steel for maximum service life
- Robust double piston guide in compact design
- Optional inductive and magnetic position sensors
- Optionally available with FKM seals for higher temperatures up to 150°C (on request)
- Integrable purge air connection to prevent contamination

C40
RGP-30 - 2-jaw long stroke gripper air operated

Item No.	170109	170110
Design	RGP 30	RGP 30-GA
Gripping force at 6 bar N	630	720
Stroke per jaw mm	30	30
Gripping force maintained N	-	90
Recommended workpiece weight kg	3	3
Weight kg	3,2	3,2
Width mm	134	134
Height mm	66	66
Depth mm	94	94
Mx Nm	30	30
My Nm	95	95
Mz Nm	45	45
Fz N	1000	1000
Operating pressure min./max. without GA/GI bar	2-8	-
Operating pressure min./max. with GA/GI bar	-	5-6,5
Clamping time s	0,3	0,35
Opening time s	0,3	0,35
Air consumption per cycle cm^3	92	92
Max. allowable length of jaw mm	150	100

2-jaw long stroke gripper

RGP-30

Max. load on gripper and jaw

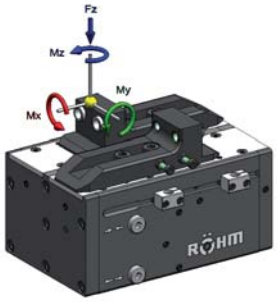

Clamping force diagram

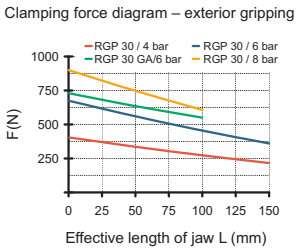

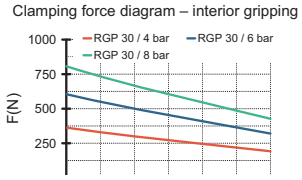

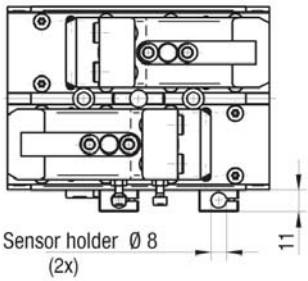

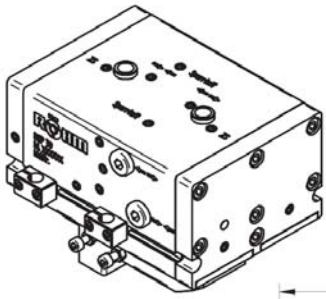

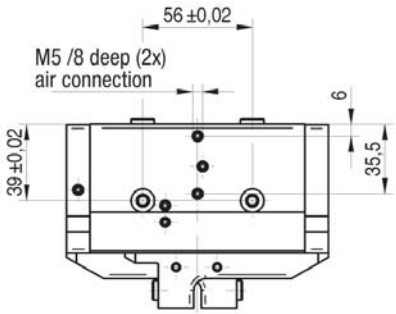

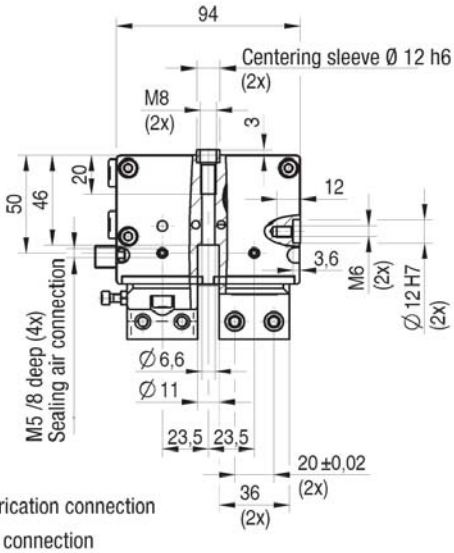

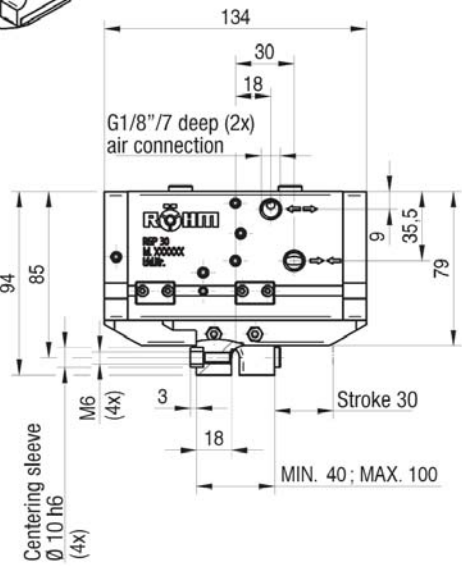

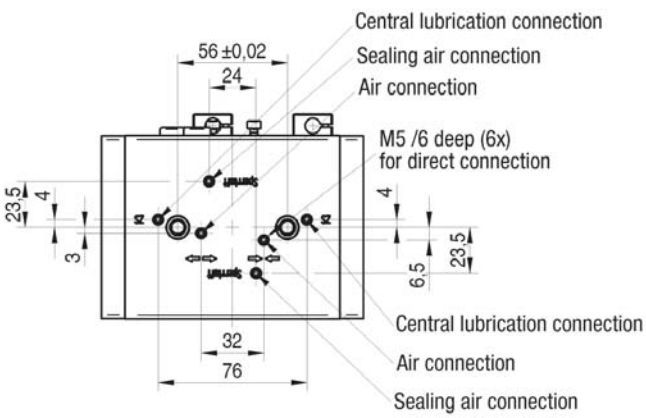

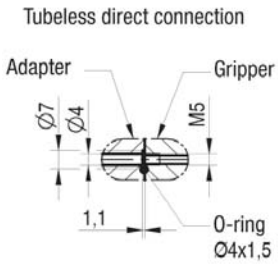

2-jaw long stroke gripper

RGP-40

APPLICATION

Sealed large-stroke gripper for handling large parts and high part variety.

TYPE

Available in sizes 30, 40 and 50 with integrated seal - optionally with gripping force securing device.
High precision thanks to double-piston drive synchronized via gear wheel.

CUSTOMER BENEFITS

- High gripping force with simultaneously high jaw stroke by means of double-acting pressure pistons
- High torque support for using long gripper fingers thanks to elongated jaw guide
- Sealed for rough ambient conditions with quad-ring seal and highly precise intermediate jaws
- Maximum flexibility thanks to versatile connection and fastening options

TECHNICAL FEATURES

- Centrically clamping in compact design made of high-strength, hard-coated aluminium alloy
- All functional parts made of hardened steel for maximum service life
- Robust double piston guide in compact design
- Optional inductive and magnetic position sensors
- Optionally available with FKM seals for higher temperatures up to 150°C (on request)
- Integrable purge air connection to prevent contamination

C40
RGP-40 - 2-jaw long stroke gripper air operated

Item No.	170111	170112	170113
Design	RGP 40	RGP 40-GA	RGP 40-GI
Gripping force at 6 bar N	1260	1540	1380
Stroke per jaw mm	40	40	40
Gripping force maintained N	-	150	150
Recommended workpiece weight kg	6,3	6,3	5,5
Weight kg	5,6	5,6	5,6
Width mm	171	171	171
Height mm	83	83	83
Depth mm	115	115	115
Mx Nm	50	50	50
My Nm	100	100	100
Mz Nm	70	70	70
Fz N	1100	1100	1100
Operating pressure min./max. without GA/GI bar	2-8	-	-
Operating pressure min./max. with GA/GI bar	-	5-6,5	5-6,5
Clamping time s	0,3	0,3	0,4
Opening time s	0,3	0,4	0,3
Air consumption per cycle cm^3	240	240	240
Max. allowable length of jaw mm	200	150	150

2-jaw long stroke gripper

RGP-40

Max. load on gripper and jaw

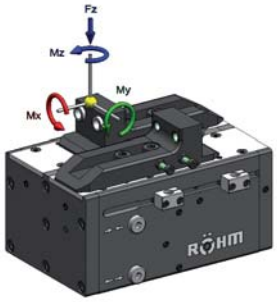

Clamping force diagram

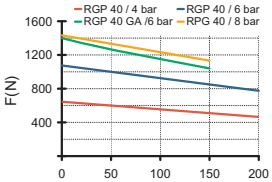

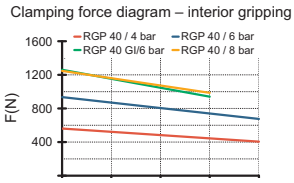

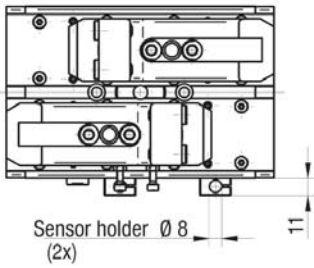

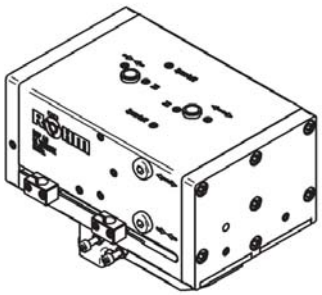

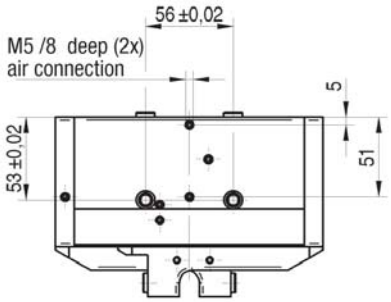

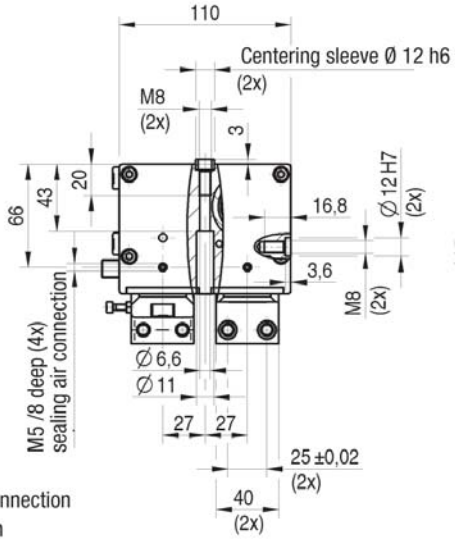

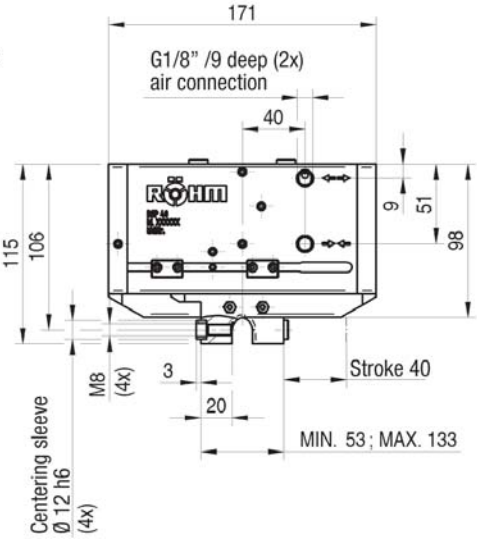

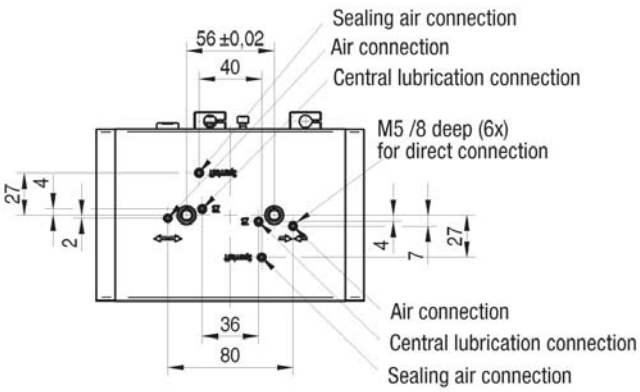

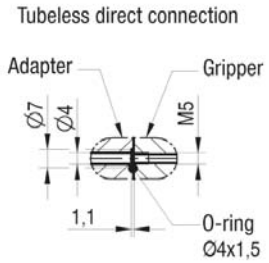

Long stroke gripper
RGP

2-jaw long stroke gripper

RGP-50

APPLICATION

Sealed large-stroke gripper for handling large parts and high part variety.

TYPE

Available in sizes 30, 40 and 50 with integrated seal - optionally with gripping force securing device.
High precision thanks to double-piston drive synchronized via gear wheel.

CUSTOMER BENEFITS

- High gripping force with simultaneously high jaw stroke by means of double-acting pressure pistons
- High torque support for using long gripper fingers thanks to elongated jaw guide
- Sealed for rough ambient conditions with quad-ring seal and highly precise intermediate jaws
- Maximum flexibility thanks to versatile connection and fastening options

TECHNICAL FEATURES

- Centrically clamping in compact design made of high-strength, hard-coated aluminium alloy
- All functional parts made of hardened steel for maximum service life
- Robust double piston guide in compact design
- Optional inductive and magnetic position sensors
- Optionally available with FKM seals for higher temperatures up to 150°C (on request)
- Integrable purge air connection to prevent contamination

C40
RGP-50 - 2-jaw long stroke gripper air operated

Item No.	170114	170115	170116
Design	RGP 50	RGP 50-GA	RGP 50-GI
Gripping force at 6 bar N	2600	2950	2680
Stroke per jaw mm	50	50	50
Gripping force maintained N	-	450	450
Recommended workpiece weight kg	13	13	11,5
Weight kg	11	11	11
Width mm	218	218	218
Height mm	103	103	103
Depth mm	141	141	141
Mx Nm	60	60	60
My Nm	100	100	100
Mz Nm	80	80	80
Fz N	1300	1300	1300
Operating pressure min./max. without GA/GI bar	2-8	-	-
Operating pressure min./max. with GA/GI bar	-	5-6,5	5-6,5
Clamping time s	0,6	0,5	0,7
Opening time s	0,7	0,8	0,6
Air consumption per cycle cm^3	600	600	600
Max. allowable length of jaw mm	250	200	200

RGP-50

Max. load on gripper and jaw

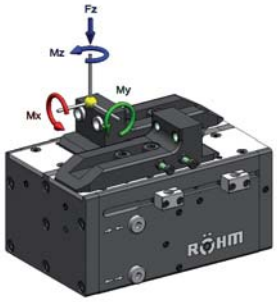

Clamping force diagram

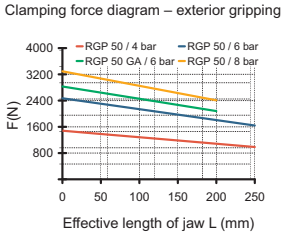

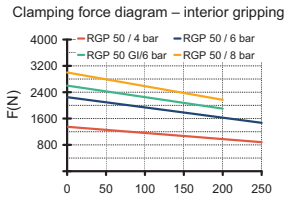

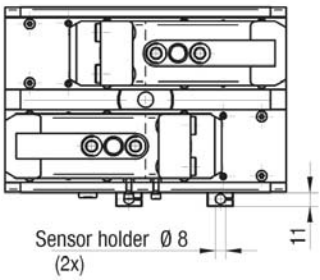

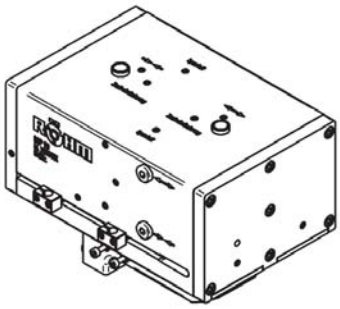

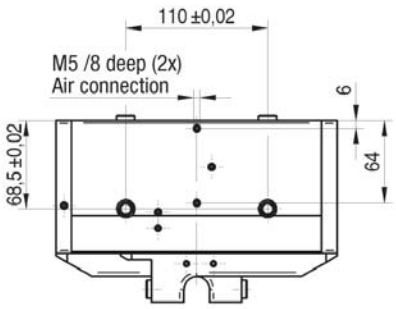

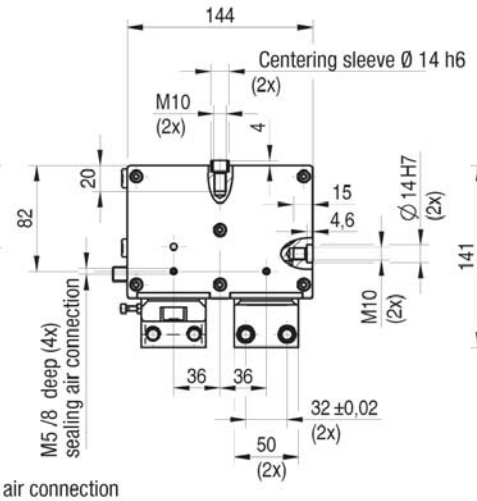

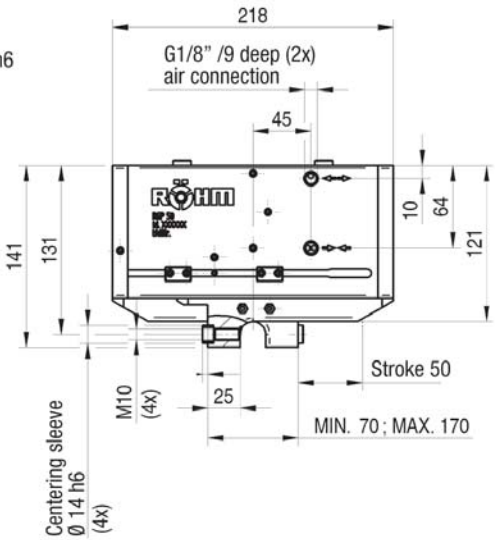

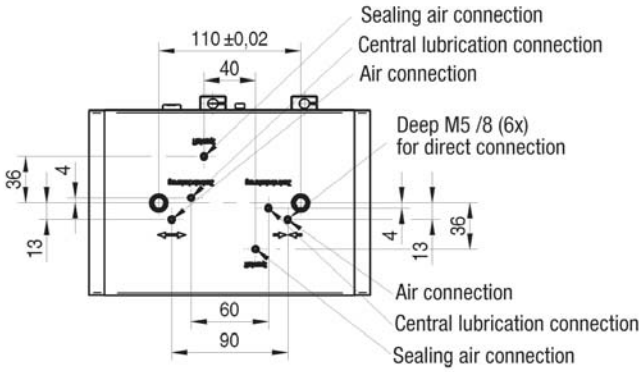

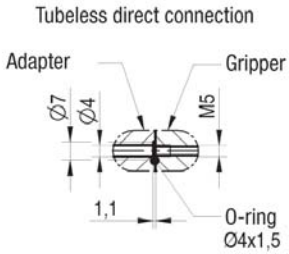

Accessories RGP

Intermediate jaw - steel (including fixing screws)
2-jaw set

Item no.	Number of jaws	Design	For
170993 ▲	2	steel	RGP-30
170995 ▲	2	steel	RGP-40
170997 ▲	2	steel	RGP-50

Jaw blank - steel (including fixing screws)
2-jaw set

Item no.	Number of jaws	Design	For
1146146 ▲	2	steel	RGP-30
1146144 ▲	2	steel	RGP-40
1131198 ▲	2	steel	RGP-50

Pressure maintenance
for double acting gripper (G1/8)

Item no.
1078823

Compressed air connection - L-Plug connector

Item no.	Design	For
477025	L-Plug connector 1/8 - 6 mm	all sizes, all types

Proximity switch

Item no.	Size (diameter/ length)	Design	For
229114	M8x1x30,5	5 m cable, open leads	all sizes, all types

Magnetic field sensors

Item no.	Size (diameter/ length)	Design	For
1132737	T-Nut	5 m cable, 3 open leads	all sizes, all types

Accessories RGP

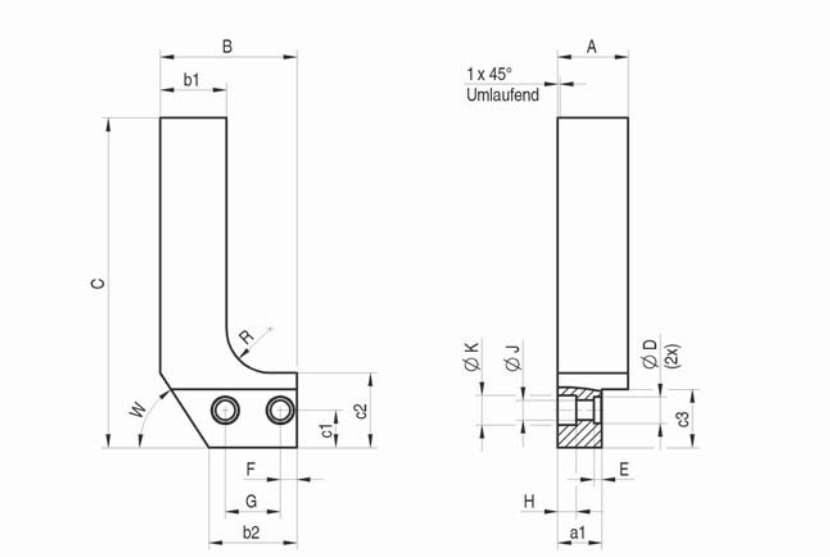

Jaw blank - steel (including fixing screws)

RGP Jaw blank - steel	30	40	50
RGP - 2-jaw set	**1146146**	**1146144**	**1131198**
A	**28**	**32**	**42**
a1	18	20	25
B	54	62	80
b1	25	30	38
b2	36	40	50
C	100	150	200
c1	13	17	22
c2	30	34	40
c3	22,5	26,5	32,5
D+0,02/+0,04	10	12	14
E+0,02	3,6	3,6	4,6
F±0,1	8	7,5	9
G±0,02	20	25	32
H	6,8	8,5	11
J	6,6	9	11
K	11	13,5	16,5
R	15	20	25
W	57°	57°	57°
Weight per jaw kg	0,6	1,2	2,6

Accessories RGP

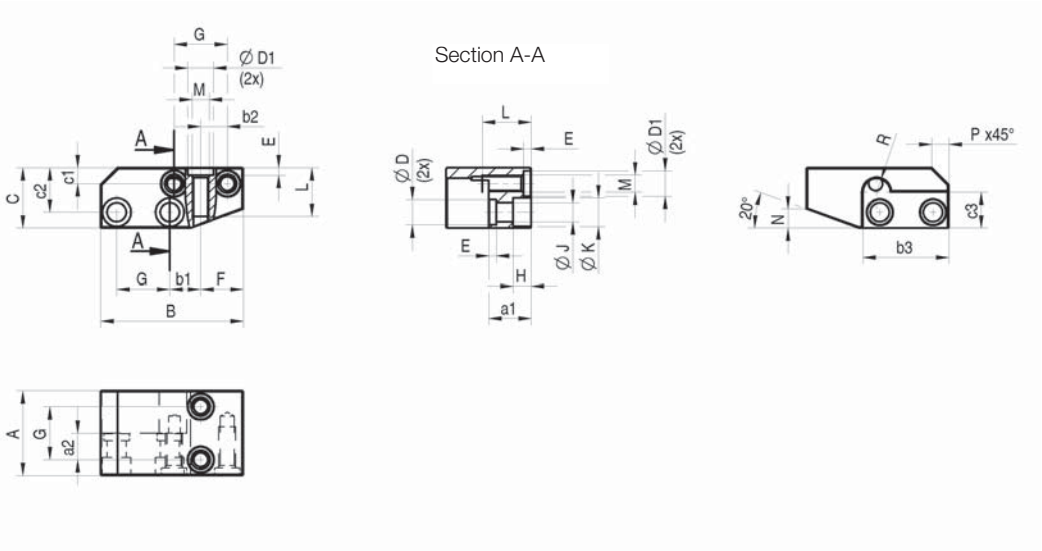

Intermediate jaw - steel (including fixing screws)

RGP Intermediate jaw - steel	30	40	50
RGP - 2-jaw set	**170993**	**170995**	**170997**
A	**36**	**40**	**50**
a1	18	20	25
a2	10	12,5	16
B	59,5	67	86
b1	13,5	14,5	20
b2	10	12,5	16
b3	36,5	40,5	50,5
C	26,5	28,5	35
c1	8	7,5	9
c2	20	21	25
c3	16	17	20,5
D+0,02/+0,04	10	12	14
E+0,02	3,5	3,5	4,6
F±0,1	18	20	25
G±0,02	20	25	32
H	6,8	8,5	11
J	6,6	9	11
K	11	13,5	16,5
L	18	23	28
M	M6	M8	M10
Nx20°	8	9	12
Px45°	7	8	10
R	5,5	6,5	6,5
Weight per jaw Kg	0,6	1,2	2,6
Centering sleeve	**170264**	**170265**	**170266**
Size	Ø10	Ø12	Ø14

Notes

RGPO-4060

APPLICATION

Premium large stroke gripper with large stroke and ground jaw guides.

CUSTOMER BENEFITS

- Up to 5 million cycles maintenance-free
- Available on request: temperature-resistant version (up to approx. 150° C)

TECHNICAL FEATURES

- Gripper body made of high-strength, hard-coated aluminium
- Toothed racks, intermediate jaws and gear wheel made of hardened steel
- High torque absorption of the intermediate jaws due to the robust flat guide of the toothed racks
- Suitable for the use of long top jaws
- Centric clamping is realized via the synchronization of the two toothed racks with one gear wheel
- Special gripper type available with additional spring set to prevent loss of gripping force during external or internal gripping
- Energy supply possible by means of screw connection or via hoseless direct connection

RGPO 4060 - 2-jaw large stroke gripper air operated

Item No.	172774	172775
Design	RGPO 4060	RGPO 4060-GA
Gripping force at 6 bar N	1250	1920
Stroke per jaw mm	60	60
Recommended workpiece weight kg	5,5	5,5
Weight kg	3,8	4,2
Width mm	170	170
Height mm	80	80
Depth mm	100	100
Mx Nm	80	80
My Nm	125	125
Mz Nm	100	100
Fz N	3000	3000
Operating pressure min./max. without GA/GI bar	3-8	-
Operating pressure min./max. with GA/GI bar	-	4-8
Clamping time s	0,35	0,4
Opening time s	0,35	0,35
Air consumption per cycle cm^3	278	278
Max. allowable length of jaw mm	150	150

RGPO-4060

Max. load on gripper and jaw

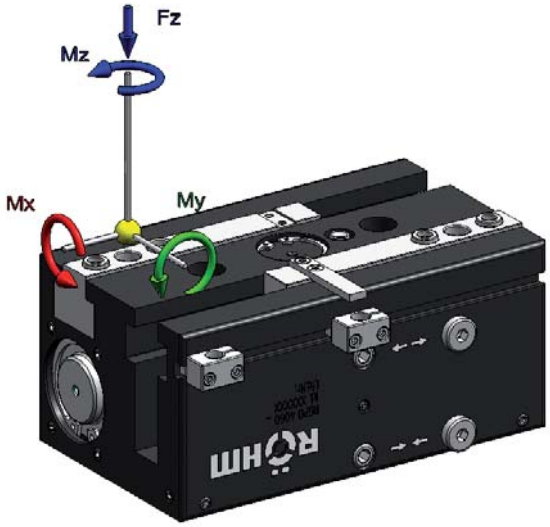

Clamping force diagram exterior gripping

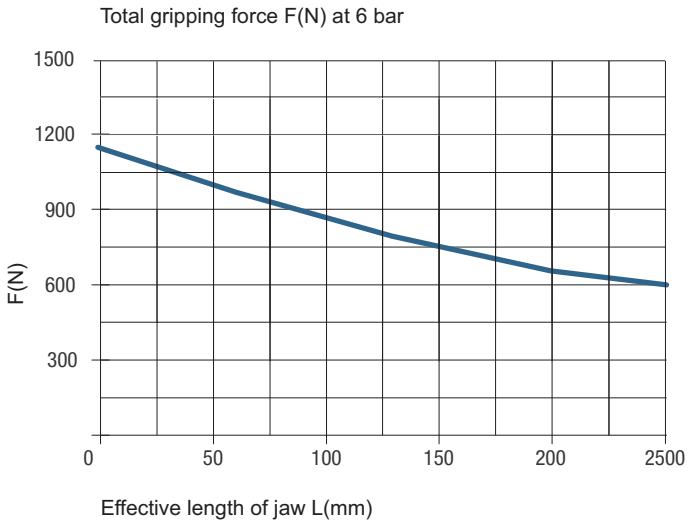

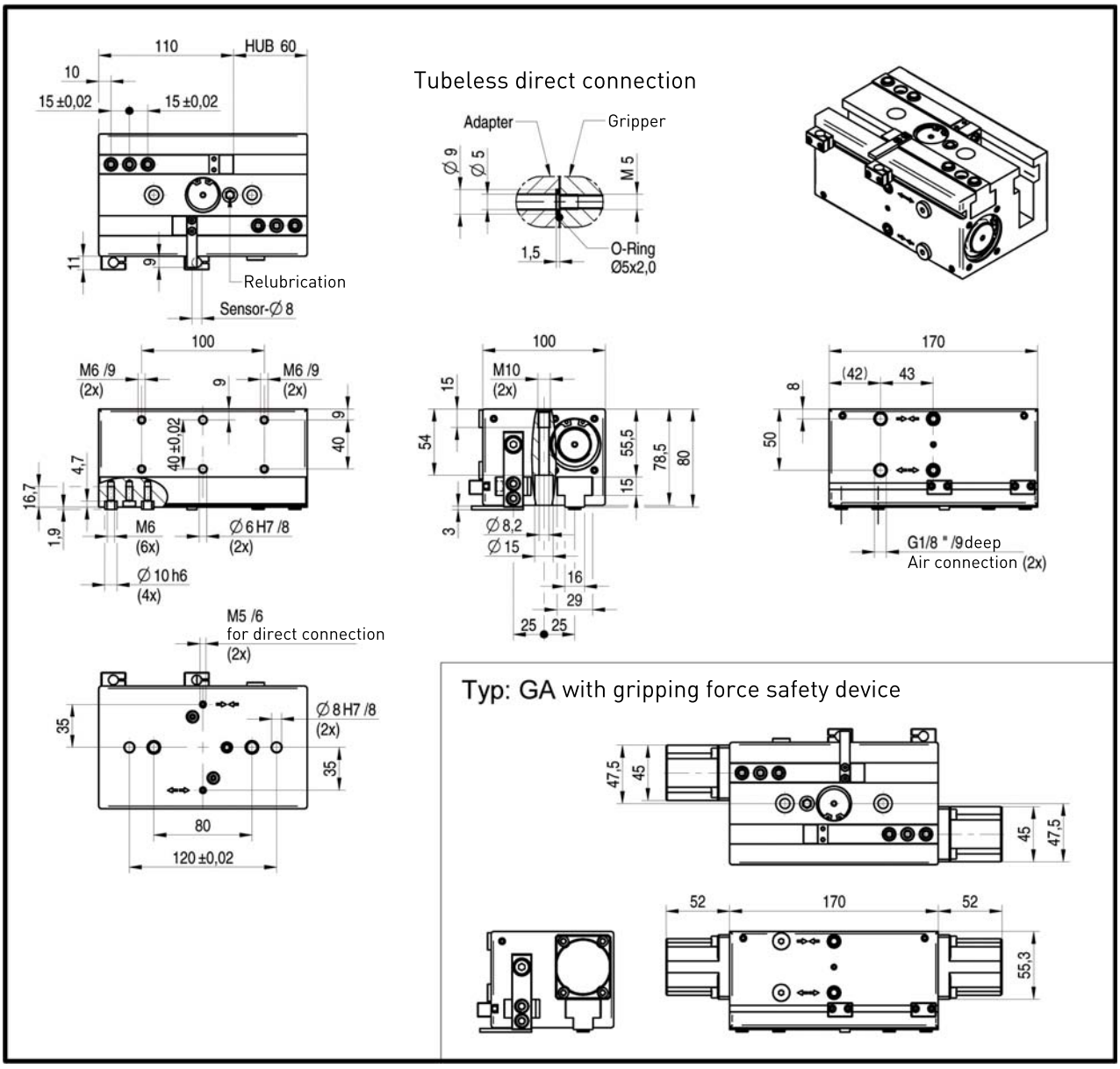

2-jaw long stroke gripper

RGPO-40100

APPLICATION

Premium large stroke gripper with large stroke and ground jaw guides.

CUSTOMER BENEFITS

- Up to 5 million cycles maintenance-free
- Available on request: temperature-resistant version (up to approx. 150° C)

TECHNICAL FEATURES

- Gripper body made of high-strength, hard-coated aluminium
- Toothed racks, intermediate jaws and gear wheel made of hardened steel
- High torque absorption of the intermediate jaws due to the robust flat guide of the toothed racks
- Suitable for the use of long top jaws
- Centric clamping is realized via the synchronization of the two toothed racks with one gear wheel
- Special gripper type available with additional spring set to prevent loss of gripping force during external or internal gripping
- Energy supply possible by means of screw connection or via hoseless direct connection

RGPO 40100 - 2-jaw large stroke gripper air operated

Item No.	**172777**
Design	RGPO 40100
Gripping force at 6 bar N	1250
Stroke per jaw mm	100
Recommended workpiece weight kg	5,5
Weight kg	5,3
Width mm	170
Height mm	80
Depth mm	100
Mx Nm	80
My Nm	125
Mz Nm	100
Fz N	3000
Operating pressure min./max. without GA/GI bar	3-8
Clamping time s	0,35
Opening time s	0,35
Air consumption per cycle cm^3	278
Max. allowable length of jaw mm	150

RGPO-40100

Max. load on gripper and jaw

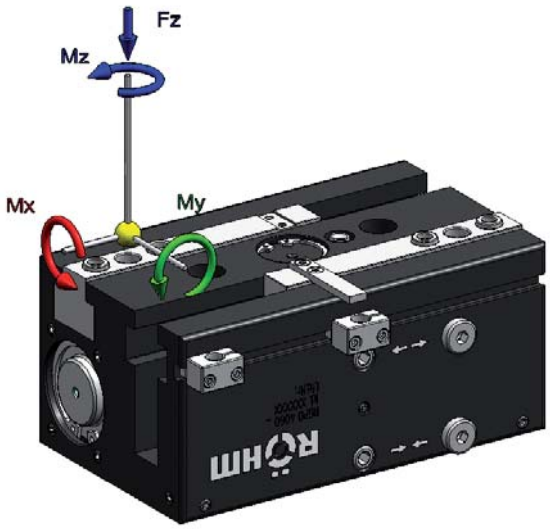

Clamping force diagram exterior gripping

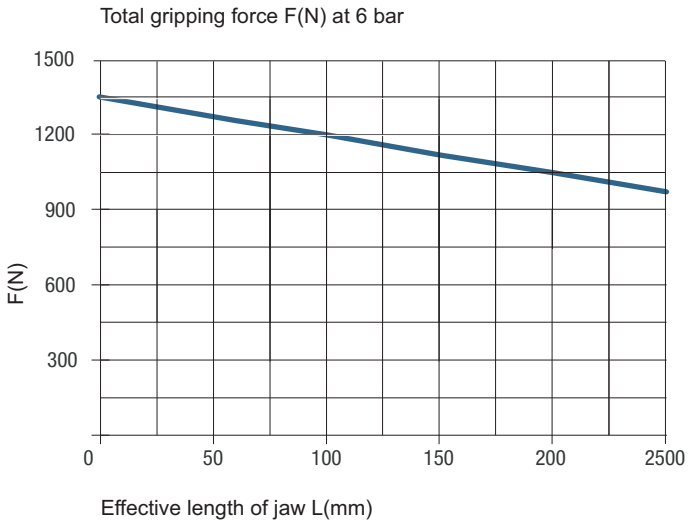

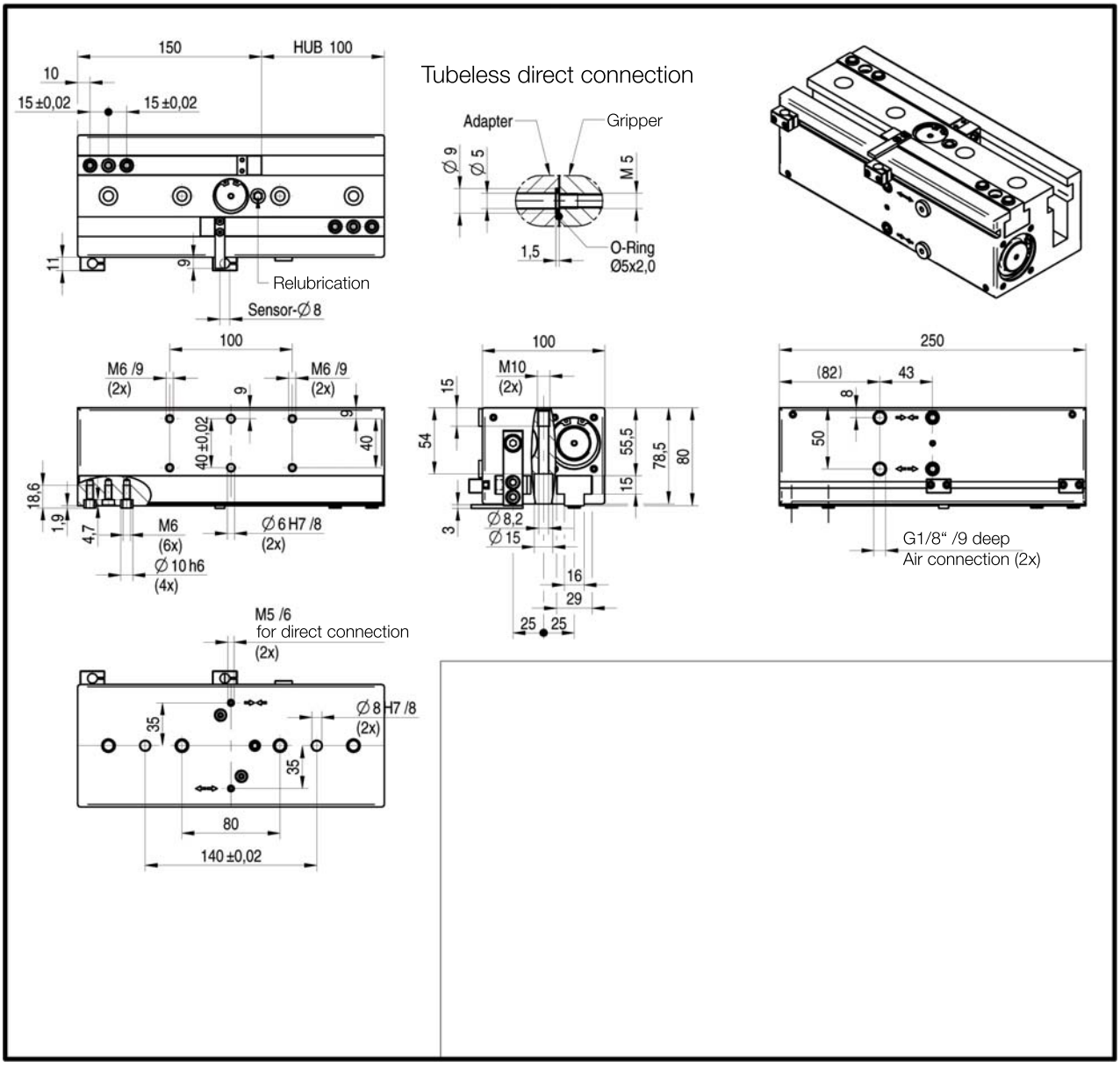

2-jaw long stroke gripper

RGPO-6360

APPLICATION

Premium large stroke gripper with large stroke and ground jaw guides.

CUSTOMER BENEFITS

- Up to 5 million cycles maintenance-free
- Available on request: temperature-resistant version (up to approx. 150° C)

TECHNICAL FEATURES

- Gripper body made of high-strength, hard-coated aluminium
- Toothed racks, intermediate jaws and gear wheel made of hardened steel
- High torque absorption of the intermediate jaws due to the robust flat guide of the toothed racks
- Suitable for the use of long top jaws
- Centric clamping is realized via the synchronization of the two toothed racks with one gear wheel
- Special gripper type available with additional spring set to prevent loss of gripping force during external or internal gripping
- Energy supply possible by means of screw connection or via hoseless direct connection

RGPO 6360 - 2-jaw large stroke gripper air operated

Item No.	172794	172795
Design	RGPO 6360	RGPO 6360-GA
Gripping force at 6 bar N	3000	4000
Stroke per jaw mm	60	60
Recommended workpiece weight kg	15	15
Weight kg	10	11
Width mm	185	185
Height mm	121,5	121,5
Depth mm	154	154
Mx Nm	200	200
My Nm	300	300
Mz Nm	250	250
Fz N	9000	9000
Operating pressure min./max. without GA/GI bar	3-8	-
Operating pressure min./max. with GA/GI bar	-	4-8
Clamping time s	0,4	0,4
Opening time s	0,4	0,5
Air consumption per cycle cm^3	710	710
Max. allowable length of jaw mm	200	200

RGPO-6360

Max. load on gripper and jaw

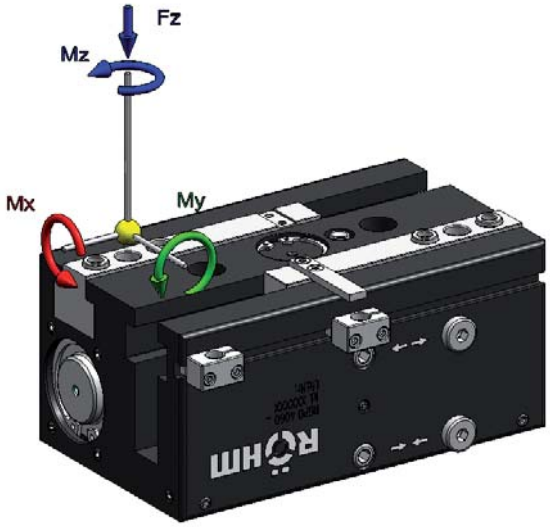

Clamping force diagram exterior gripping

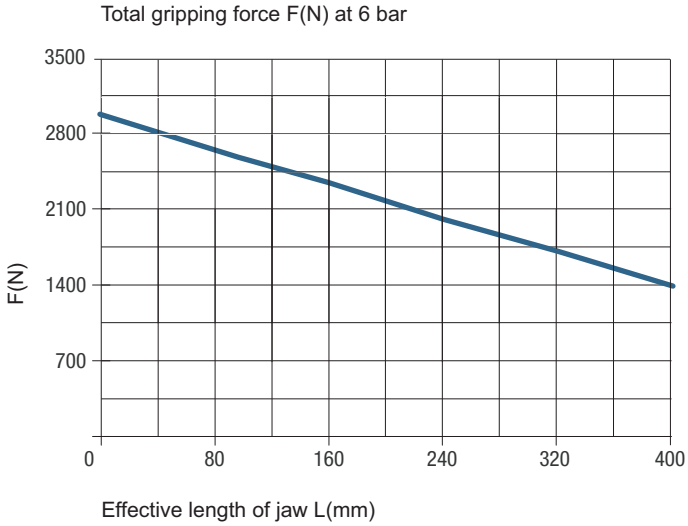

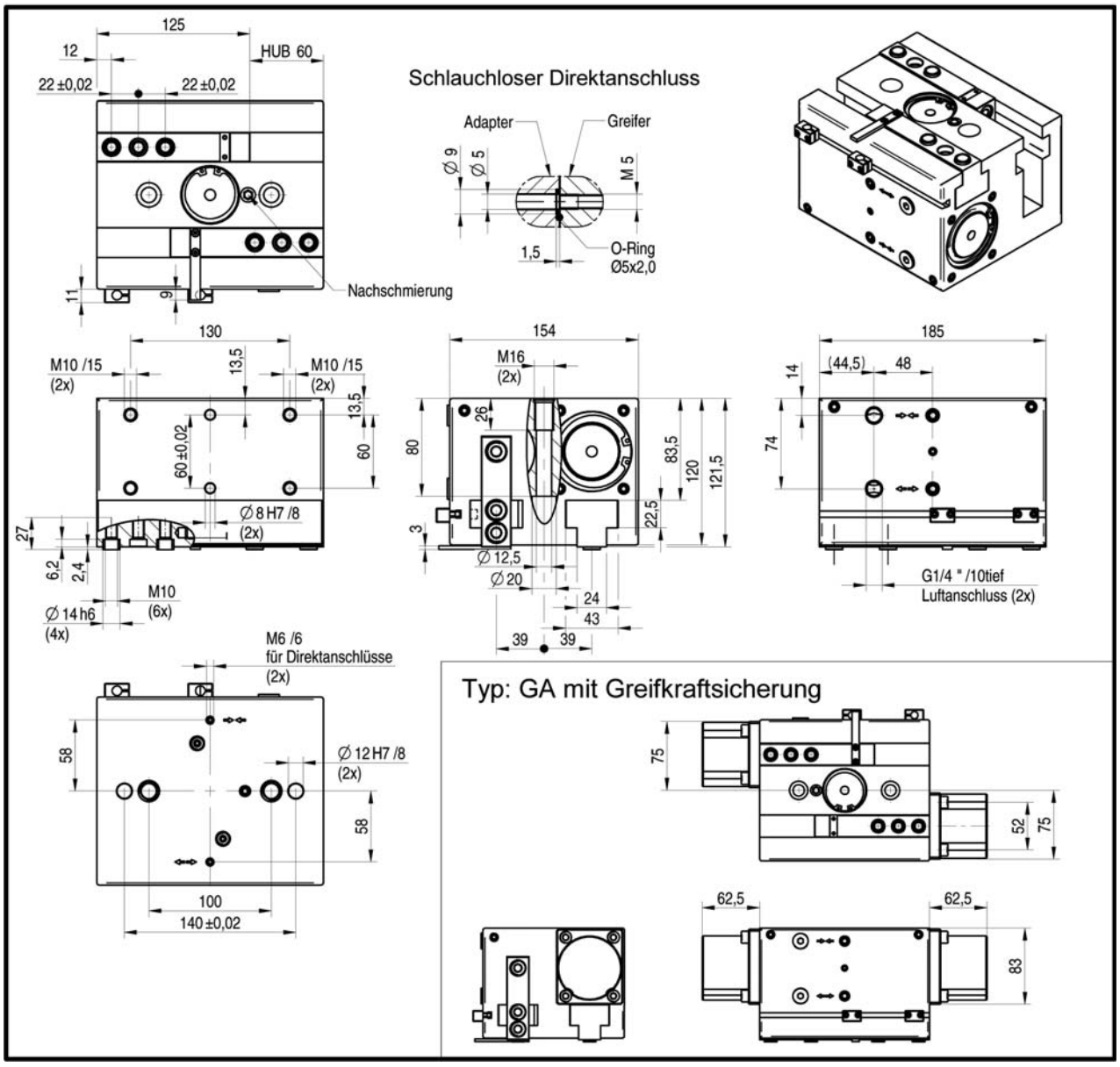

2-jaw long stroke gripper

RGPO-63100

APPLICATION

Premium large stroke gripper with large stroke and ground jaw guides.

CUSTOMER BENEFITS

- Up to 5 million cycles maintenance-free
- Available on request: temperature-resistant version (up to approx. 150° C)

TECHNICAL FEATURES

- Gripper body made of high-strength, hard-coated aluminium
- Toothed racks, intermediate jaws and gear wheel made of hardened steel
- High torque absorption of the intermediate jaws due to the robust flat guide of the toothed racks
- Suitable for the use of long top jaws
- Centric clamping is realized via the synchronization of the two toothed racks with one gear wheel
- Special gripper type available with additional spring set to prevent loss of gripping force during external or internal gripping
- Energy supply possible by means of screw connection or via hoseless direct connection

RGPO 63100 - 2-jaw large stroke gripper air operated

Item No.	**172797**
Design	RGPO 63100
Gripping force at 6 bar N	3000
Stroke per jaw mm	100
Recommended workpiece weight kg	15
Weight kg	13,4
Width mm	185
Height mm	121,5
Depth mm	154
Mx Nm	200
My Nm	300
Mz Nm	250
Fz N	9000
Operating pressure min./max. without GA/GI bar	3-8
Clamping time s	0,7
Opening time s	0,7
Air consumption per cycle cm^3	1180
Max. allowable length of jaw mm	200

RGPO-63100

Max. load on gripper and jaw

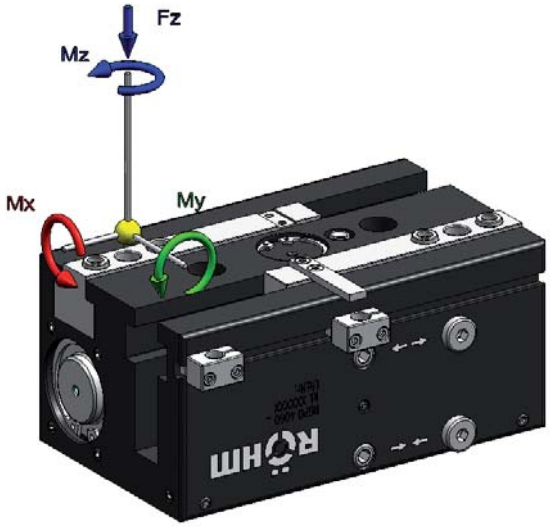

Clamping force diagram exterior gripping

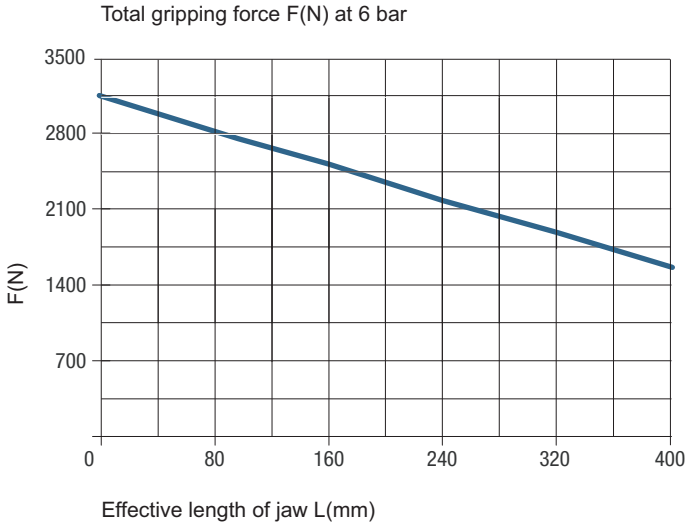

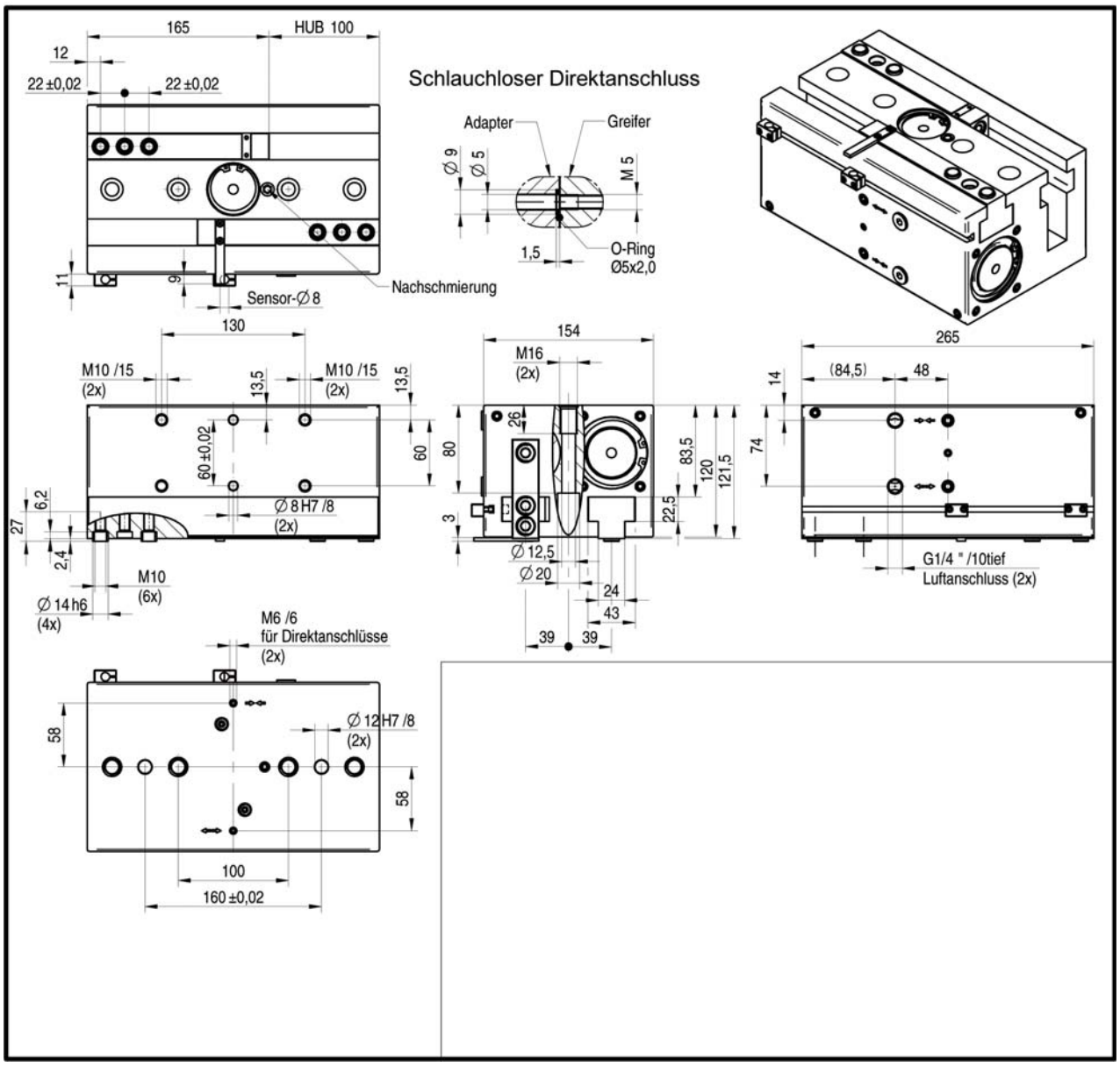

2-jaw long stroke gripper

Application-specific grippers

RDPP - Sealed parallel gripper

APPLICATION
Sealed parallel gripper with precise square guide for rough environments.

TYPE
Available in sizes 80 to 160 in especially compact design.

CUSTOMER BENEFITS
- Doubly sealed precision square guide for use under drilling or grinding emulsions
- Optionally with gripping force securing device for inner and outer clamping
- Gripper fingers mounted laterally for minimum load distance
- Maximum flexibility thanks to versatile connection and fastening options

TECHNICAL FEATURES
Centrically clamping in compact design made of high-strength, hard-coated aluminium alloy. All functional parts made of hardened steel for maximum service life. Position can be queried using inductive and magnetic sensors.

Other sizes available on request. Optionally available with FKM seals for higher temperatures up to 150°C (on request).

RPR - Compact long stroke gripper

APPLICATION
Compact long stroke gripper for handling large parts and high part variety.

TYPE
Available in sizes 22 and 42 in especially compact design. High precision thanks to double-piston drive synchronized via gear wheel.

CUSTOMER BENEFITS
- Compact design with long jaw stroke for especially cramped spatial conditions
- High gripping force with simultaneously long jaw stroke by means of double-acting pressure pistons
- Gripper fingers mounted laterally for minimum load distance
- Maximum flexibility thanks to versatile connection and fastening options

TECHNICAL FEATURES
Centrically clamping in compact design made of high-strength, hard-coated aluminium alloy. All functional parts made of hardened steel for maximum service life. Robust double-piston guide in compact housing, pneumatically actuated. Position can be queried using inductive and magnetic sensors. Integrated damping ring in the end positions for high availability.

Other sizes available on request. Optionally available with FKM seals for higher temperatures up to 150°C (on request).

Notes

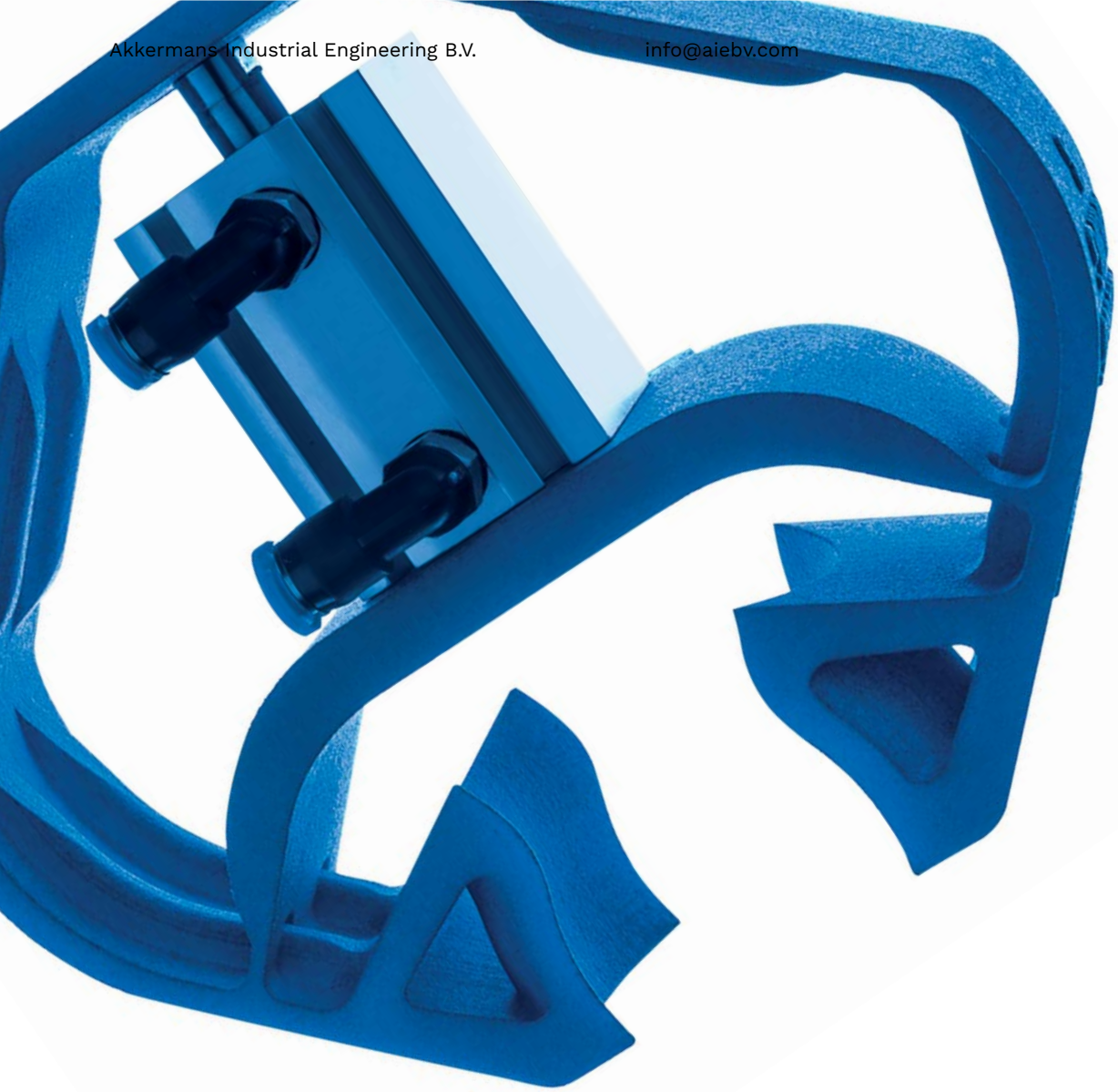

INDIVIDUAL SINGLE PIECE WITH OPTIMIZED DESIGN

With the help of a 3D model of the workpiece, the synthetic RRMG gripper is individually and perfectly adapted to the respective workpiece. Special jaws with free-form surfaces allow the secure gripping and clamping of every sensitive workpiece with complex geometries.

The particularly robust and resistant design of the new synthetic RRMG gripper makes a 30 % higher clamping force possible.

RRMG

RÖHM
Rapid
Manufacturing
Gripper

- 2

Sizes
2-3

Video Synthetic gripper

SYNTHETIC GRIPPER

Whether round material, prismatic workpieces or free-form surfaces, the synthetic RRMG gripper from RÖHM is individually adapted to the workpiece and produced. Only a 3D model of the workpiece is required, and RÖHM will produce the individual synthetic RRMG gripper based on that. This customer-specific solution is therefore perfect for gripping and clamping sensitive workpieces with complex geometries.

ADVANTAGES AT A GLANCE

- Component-specific individual piece for sensitive workpieces with complex geometries
- FEM-optimized design with 30 % higher clamping force for a greater range of use
- Up to 16 million gripper cycles without required maintenance or signs of wear

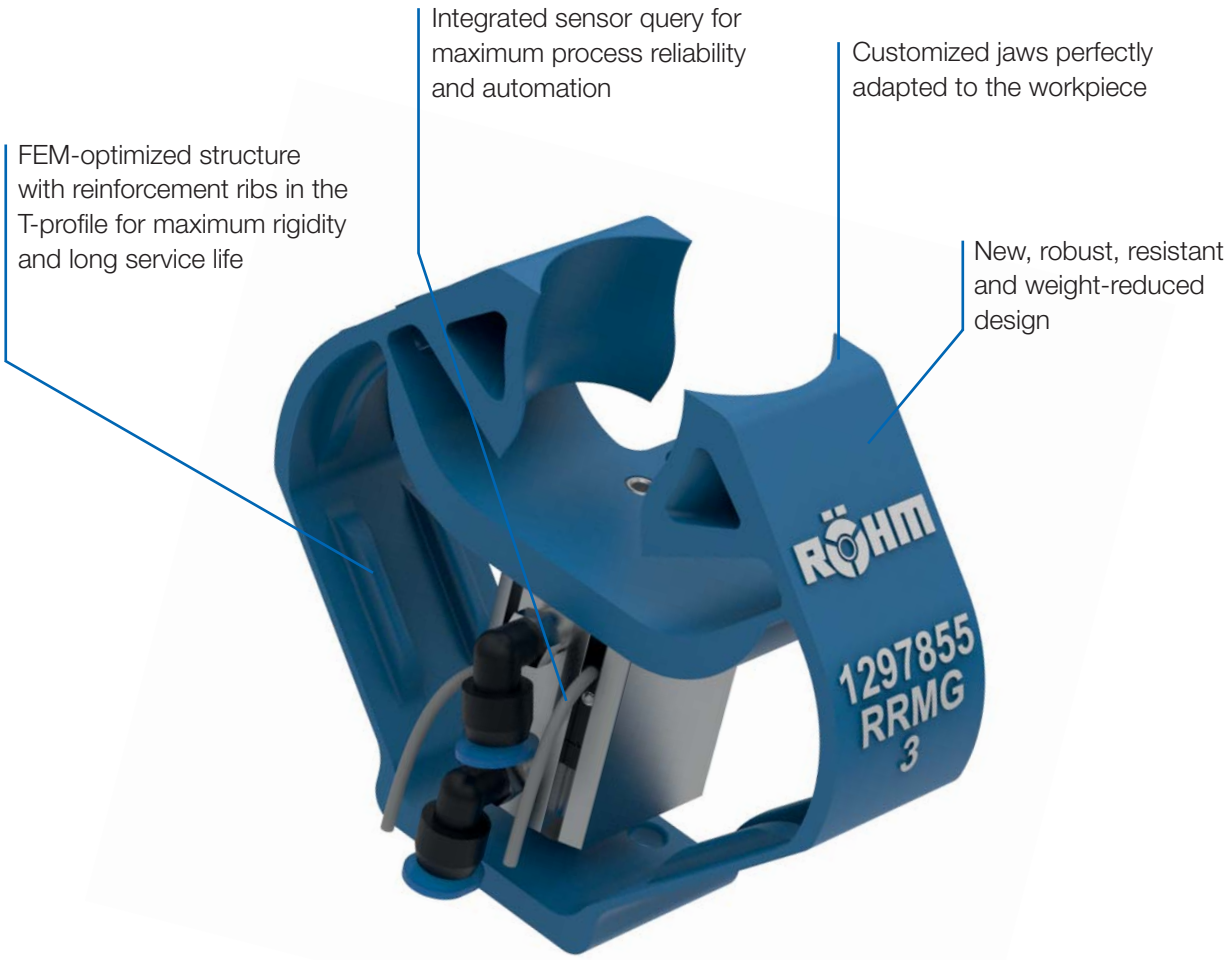

RRMG

APPLICATION

Synthetic gripper for light, sensitive workpieces with complex geometries.

TYPE

Synthetic gripper RRMG - customized and perfectly adapted jaws on the form of the workpiece.

CUSTOMER BENEFITS

- Part specific unique gripper for sensitive workpieces with complex geometries
- FEM optimized structure with 30 % higher clamping force
- Customized and perfectly adapted to the workpiece using the 3D-model
- Application specific design of the flange for maximum flexibility
- Up to 16 million gripping cycles without maintenance or wear and tear

TECHNICAL FEATURES

- Synthetically built by selective laser sinthering for short delivery times
- Especially robust and durable material polyamid with FEM-optimized structure
- Optional position monitoring by installable standard sensors
- Position monitoring by magnetic sensors possible
- Further designs and sizes on request (e.g. double gripper, internal gripper, etc.)

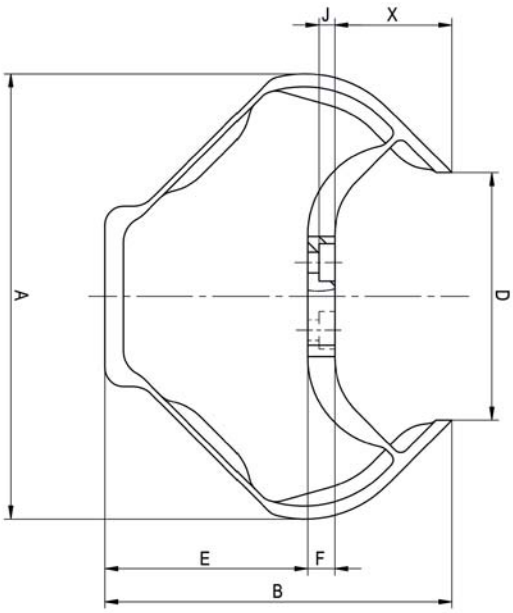

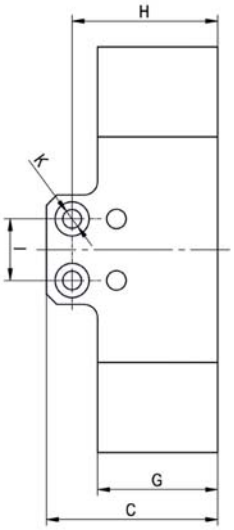

Synthetic gripper RRMG

	Size	Gripping force* N	Stroke* mm	Clamping point X	A mm	B mm	C mm	D mm	E mm	F mm	G mm	H mm	I mm	J mm	K Ø mm
RRMG	2	80	2,6	23,2	92	75,8	37	50	47	5,5	25	31	13	3,4	4,5
RRMG	3	152	4,3	31,2	118,6	92,4	50	66	54	7,2	35	42,5	18	4,2	5,5

* At clamping point X

RRMG-MRK

APPLICATION

Additive manufactured gripper with HRC-function for customer-specific and complex workpiece geometries. Rounding of edges and corners as well as the robust and durable design ensure protection of the worker from injury in accordance with the latest ISO 10218 and ISO/TS15066 standards by additional flexibility.

TYPE

Additive manufactured gripper with customized and perfectly adapted jaws on the form of the workpiece.

CUSTOMER BENEFITS

- Accurate gripping of all conceivable workpiece shapes through form fitting adaption of the gripper fingers by additive manufacturing
- Up to 120 N of gripping force, depending on the contour and surface of the workpiece
- Maintenance-free for up to 10 million gripping cycles – with up to 100 gripping cycles per minute
- Solid, durable design with extremely low net weight (300 g)

TECHNICAL FEATURES

- The clamping position is comfortably reached by integrated sensors
- Gripping position can be changed by 90° with the flange
- Synthetically built by selective laser sinthering for short delivery times
- Especially robust and durable material polyamid with FEM-optimized structure
- Optional position monitoring by installable standard sensors
- Position monitoring by magnetic sensors possible
- Further designs and sizes on request (e.g. double gripper, internal gripper, etc.)

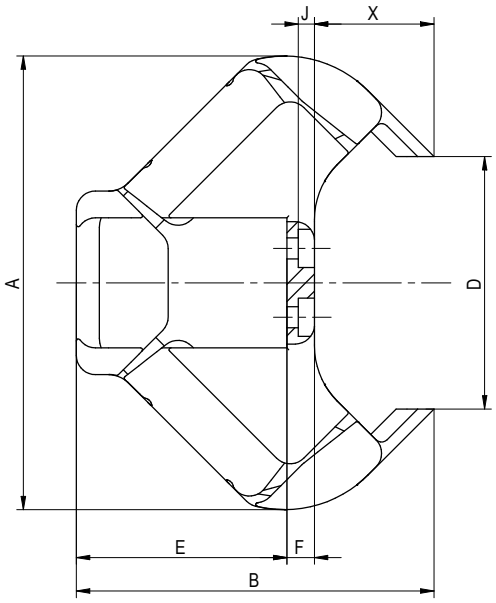

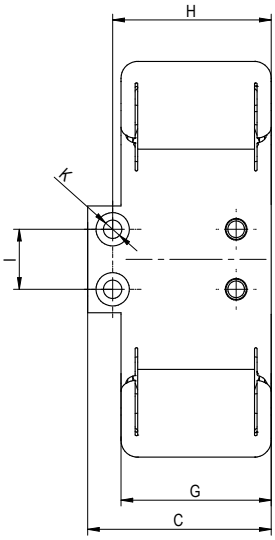

Synthetic gripper RRMG-MRK

	Gripping force* N	Stroke* mm	Clamping point X	A mm	B mm	C mm	D mm	E mm	F mm	G mm	H mm	I mm	J mm	K Ø mm
RRMG-MRK	120**	4,3	31,2	118,6	93,4	55	66	55	7,2	45	47,5	18	4,2	5,5

* At clamping point X
** Max. clamping force must be controlled by air pressure

Exclusive distribution through KUKA Systems GmbH

Operation guide

RSP-Flex - basic unit*

- With through hole

RSP-Flex - basic unit with fluid feedthrough*

- With fluid feedthrough and through hole
- -F4 4-way fluid feedthrough (RSP32-Flex)
- -F8 8-way fluid feedthrough (RSP42-Flex / RSP52-Flex)

RSP-Flex - basic unit with fluid and cable feedthrough*

- With fluid feedthrough, with cable feedthrough
- -F4 + -KD8 8-way cable feedthrough (RSP32-Flex)
- -F8 + -KD8 8-way cable feedthrough (RSP42-Flex / RSP52-Flex)

RSP-Flex - basic unit with fluid and cable feedthrough and inductive attachment kit*

- With fluid feedthrough, with cable feedthrough, with inductive attachment kit for monitoring the swivel position with proximity switches
- -F4 + -KD8 + -AS inductive attachment kit (RSP32-Flex)
  -F8 + -KD8 + -AS inductive attachment kit (RSP42-Flex / RSP52-Flex)

* The monitoring of the swivel position by up to 6 magnetic sensors is recommended for all swivel units

SWIVEL ANGLE AND END POSITION ADJUSTMENT

RSP-90-J3
Pivot angle 90°
End position ± 3°

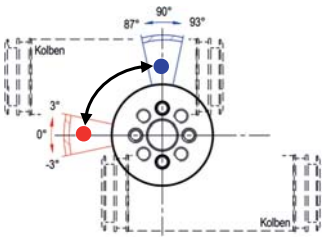

RSP-180-J3
Pivot angle 180°
End position ± 3°

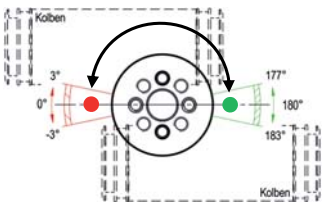

RSP-180-J90
Pivot angle 180°
End position 90 ± 3°

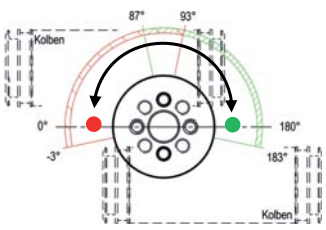

RSP-180-J3-MV
Pivot angle 90°-180°- 90°
End position ± 3°

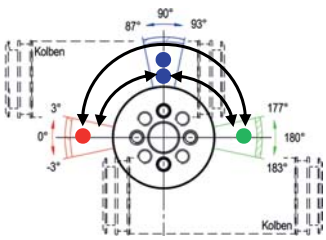

with mechanically locked middle position

Operation guide

RSP-FLEX END POSITION ADJUSTMENT

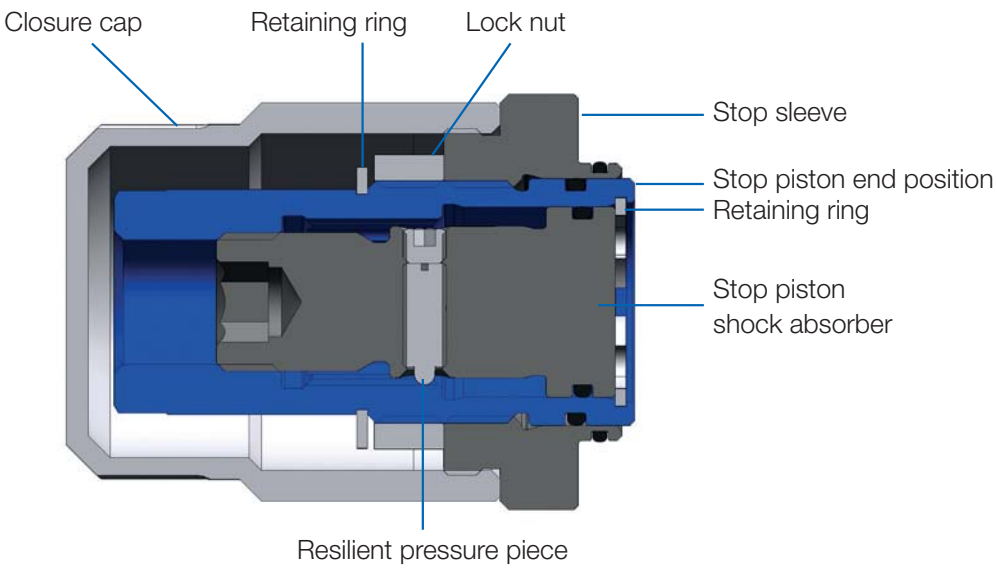

- No unintentional readjustment of the end position thanks to the use of the lock nut with fine thread
- Stepless adjustment of the end angle
- End position is not maladjusted when the shock absorber is adjusted
- Stop piston shock absorber is locked through resilient pressure piece

THE DAMPER SETTING MAKES THE DIFFERENCE

Simple load adaptation
Flexible and easy damper adjustment from outside using a wrench. It is not necessary to exchange or disassemble the swivel unit. Result: Can be quickly and easily integrated in the system.

The trick with the click
The shock absorber hardness can be uniquely documented. Thanks to the snap-in adjustability, the system-specific setting can be quickly and reliably reproduced.

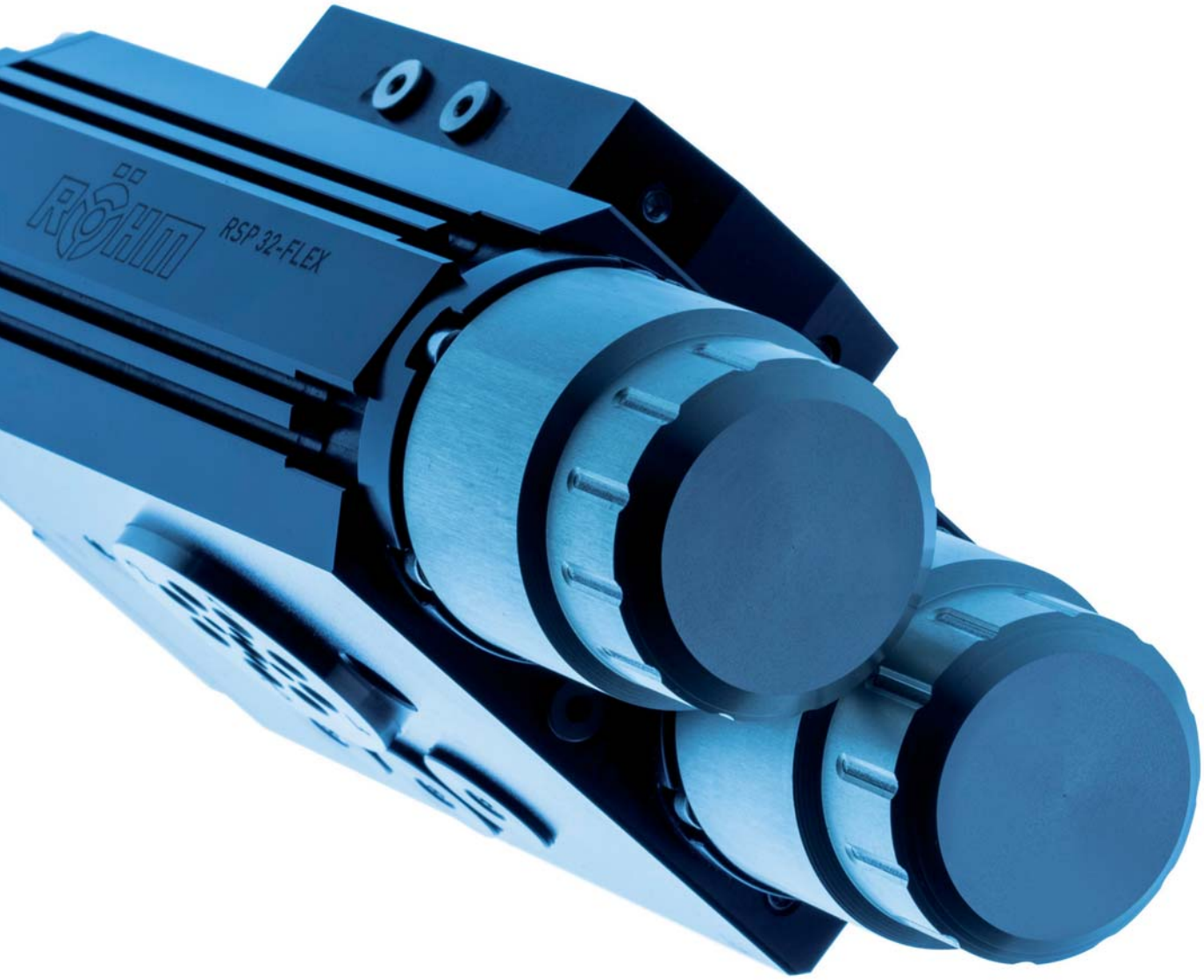

NOMENCLATURE

RSP	52	-Flex	-180°	-J3	-MV	-F8	-KD8	-AS
	1.					2.	3.	4.
Pneumatically actuated swivel unit	32 / 42 / 52 (Size)	-Flex (flexible damper adjustment)	-180° (Swivel angle)	-J3 (End position adjustability)	-MV (Middle position locked)	-F4 / -F8 (4-/8-way fluid feedthrough)	Cable feed-through (M8), sensor plug	Inductive at-tachment kit

1. Select the size (32 / 42 / 52)
2. Is a fluid feedthrough required, yes/no?
3. Cable feedthrough, yes/no?
4. Inductive attachment kit, yes/no?

SWIVEL UNIT RSP-FLEX

Especially for the automated loading and unloading to machine tools, as well as for the fast and precise insertion of components in assembly systems, the RSP-Flex swivel units offer an alternative to complicated special designs. Thanks to the modular structure and the extensive expansion options, they are flexible and reliably integrated. The innovative shock absorber concept with flexible and infinitely variable adjustability in all end positions allows for smoothly and precise swiveling.

ADVANTAGES AT A GLANCE

- Smoothly and precise swiveling thanks to innovative shock absorber concept
- High torque thanks to enlarged piston diameter for faster cycle times
- Maintenance-free up to 10 million swivel cycles

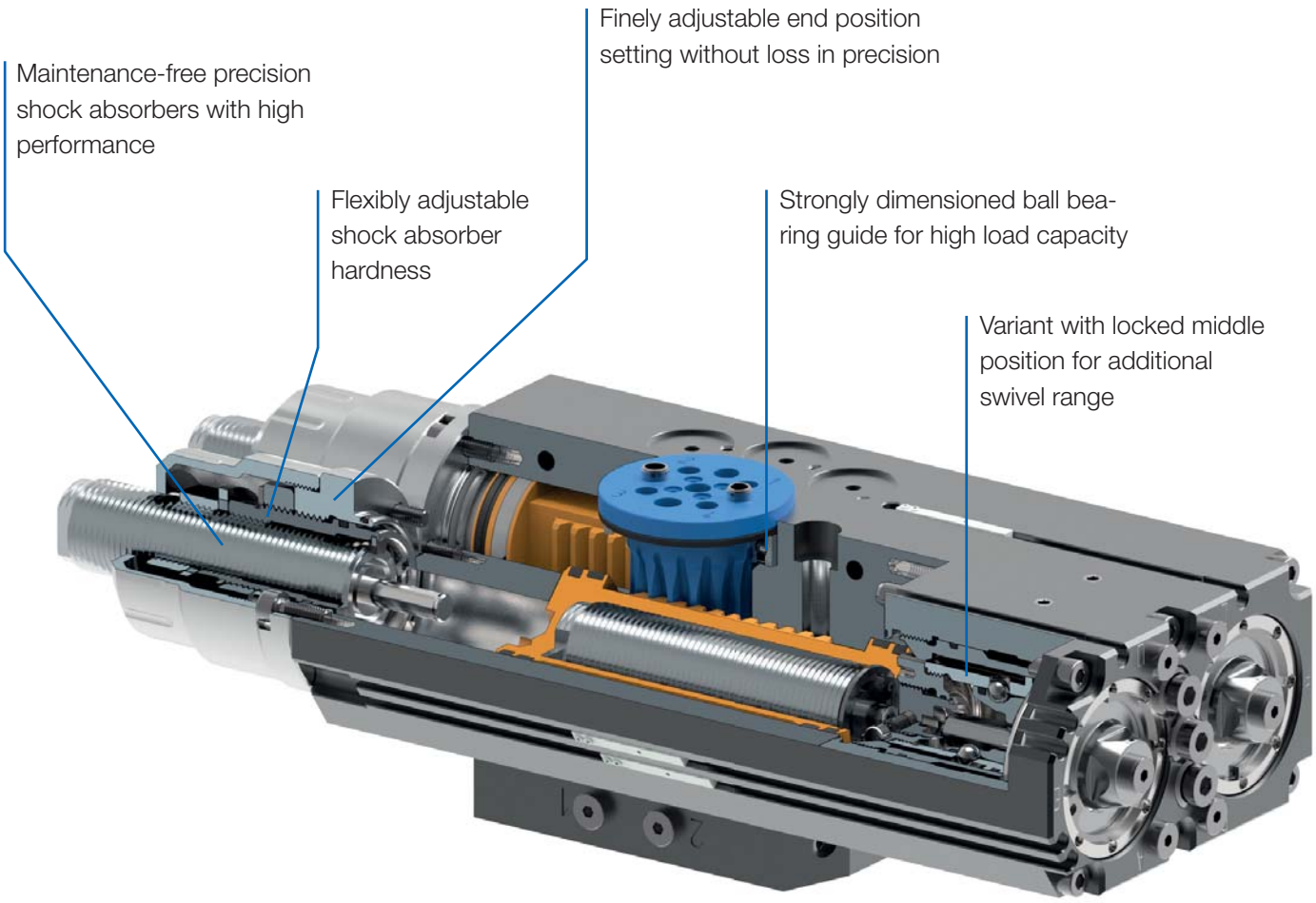

RSP-Flex 32

APPLICATION

Swivel unit with high torque and compact design.
Flexibly adjustable hardness of the shock absorbers.

TYPE

Realise two damping ranges, „hard“ and „soft“ with one swivel unit!

CUSTOMER BENEFITS

- Uniform damping in the end positions
- Fine adjustment of the dampers at the end position settings
- Optimal bearing support of the rotary plate for several million cycles
- Energy supply possible by means of screw connection or via hoseless direct connection
- Can be used in all positions - e.g. vertical, suspended, horizontal

TECHNICAL FEATURES

- Body made of high-strength, hard-coated aluminium
- Pinion shaft and rack made of hardened steel
- End position can be infinitely variably adjusted ± 3° or ± 90°
- Optional inductive and magnetic position sensors
- Up to 8-fold fluid feeder
- Up to 9-fold cable feed-through

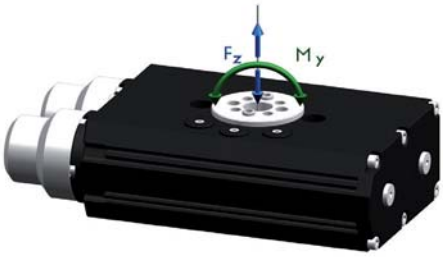

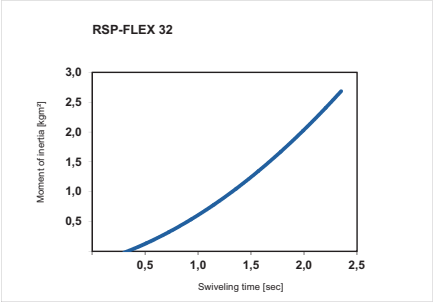

C40
RSP-Flex, air operated

	RSP32-Flex-90-J3	RSP32-Flex-180-J3	RSP32-Flex-180-J90	RSP32-Flex-180-J3-MV
RSP-Flex Basic unit	**174000**	**174001**	**174002**	**174003**
RSP-Flex + fluid feed-through*	**174006**	**174007**	**174008**	**174009**
RSP-Flex + fluid feed-through* + cable feedthrough**	**174012**	**174013**	**174014**	**174015**
RSP-Flex + fluid feed-through* + cable feedthrough + proximity switch adapter*****	**174018**	**174019**	**174020**	**174021**
Pivot angle °	90	180	180	180 + 2x90
End position adjustability °	± 3	± 3	90 ± 3	± 3
Mid-position adjustability °	-	-	-	± 3
Torque at 6 bar Nm	10	10	10	10
Nominal operating pressure (min./max.) bar	6	6	6	6
Connecting hose ø mm	6	6	6	6
Operating temperature min./max. °C	5-80	5-80	5-80	5-80
Repeat accurancy °	± 0,01	± 0,01	± 0,01	± 0,01
Weight kg	2,5	2,5	2,5	3,6
Axial bearing load F_z N	800	800	800	800
Radial bearing load M_y Nmm	19	19	19	19

* Number of fluid feed-through RSP32=4; RSP42/RSP52=8 (max. 8 bar)
** Number of signals=RSP32=8; RSP42/52=10 (24V, max. 1A), plug machine side M16, plug tool side M8
*** Number of holders for proximity switches: 3

RSP-Flex 42

APPLICATION

Swivel unit with high torque and compact design.
Flexibly adjustable hardness of the shock absorbers.

TYPE

Realise two damping ranges, „hard“ and „soft“ with one swivel unit!

CUSTOMER BENEFITS

- Uniform damping in the end positions
- Fine adjustment of the dampers at the end position settings
- Optimal bearing support of the rotary plate for several million cycles
- Energy supply possible by means of screw connection or via hoseless direct connection
- Can be used in all positions - e.g. vertical, suspended, horizontal

TECHNICAL FEATURES

- Body made of high-strength, hard-coated aluminium
- Pinion shaft and rack made of hardened steel
- End position can be infinitely variably adjusted ± 3° or ± 90°
- Optional inductive and magnetic position sensors
- Up to 8-fold fluid feeder
- Up to 9-fold cable feed-through

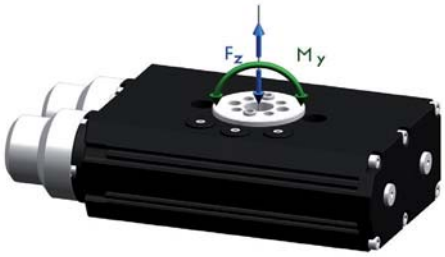

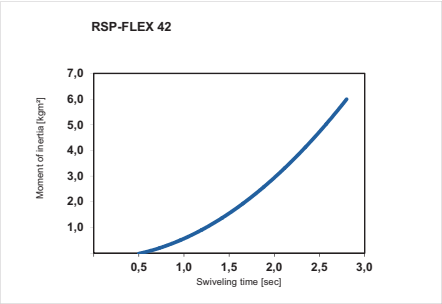

C40
RSP-Flex 42, air operated

	RSP42-Flex-90-J3	RSP42-Flex-180-J3	RSP42-Flex-180-J90	RSP42-Flex-180-J3-MV
RSP-Flex Basic unit	**174024**	**174025**	**174026**	**174027**
RSP-Flex + fluid feed-through*	**174030**	**174031**	**174032**	**174033**
RSP-Flex + fluid feed-through* + cable feedthrough**	**174036**	**174037**	**174038**	**174039**
RSP-Flex + fluid feed-through* + cable feedthrough + proximity switch adapter*****	**174042**	**174043**	**174044**	**174045**
Pivot angle °	90	180	180	180 + 2x90
End position adjustability °	± 3	± 3	90 ± 3	± 3
Mid-position adjustability °	-	-	-	± 3
Torque at 6 bar Nm	23	23	23	23
Nominal operating pressure (min./max.) bar	6	6	6	6
Connecting hose ø mm				
Operating temperature min./max. °C	5-80	5-80	5-80	5-80
Repeat accurancy °	± 0,01	± 0,01	± 0,01	± 0,01
Weight kg	5	5	5	5
Axial bearing load F_z N	2900	2900	2900	2900
Radial bearing load M_y Nmm	68	68	68	68

* Number of fluid feed-through RSP32=4; RSP42/RSP52=8 (max. 8 bar)
** Number of signals=RSP32=8; RSP42/52=10 (24V, max. 1A), plug machine side M16, plug tool side M8
*** Number of holders for proximity switches: 3

RSP-Flex 52

APPLICATION

Swivel unit with high torque and compact design.
Flexibly adjustable hardness of the shock absorbers.

TYPE

Realise two damping ranges, „hard“ and „soft“ with one swivel unit!

CUSTOMER BENEFITS

- Uniform damping in the end positions
- Fine adjustment of the dampers at the end position settings
- Optimal bearing support of the rotary plate for several million cycles
- Energy supply possible by means of screw connection or via hoseless direct connection
- Can be used in all positions - e.g. vertical, suspended, horizontal

TECHNICAL FEATURES

- Body made of high-strength, hard-coated aluminium
- Pinion shaft and rack made of hardened steel
- End position can be infinitely variably adjusted ± 3° or ± 90°
- Optional inductive and magnetic position sensors
- Up to 8-fold fluid feeder
- Up to 9-fold cable feed-through

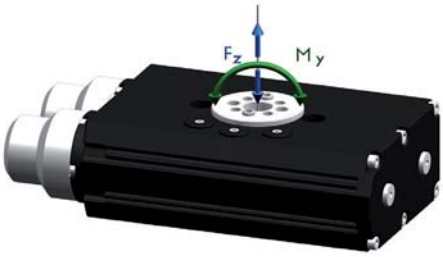

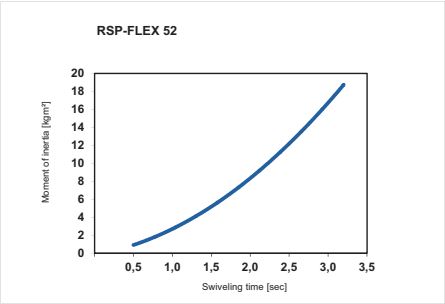

C40
RSP-Flex 52, air operated

	RSP52-Flex-90-J3	RSP52-Flex-180-J3	RSP52-Flex-180-J90	RSP52-Flex-180-J3-MV
RSP-Flex Basic unit	**174048**	**174049**	**174050**	**174051**
RSP-Flex + fluid feed-through*	**174054**	**174055**	**174056**	**174057**
RSP-Flex + fluid feed-through* + cable feedthrough**	**174060**	**174061**	**174062**	**174063**
RSP-Flex + fluid feed-through* + cable feedthrough + proximity switch adapter*****	**174066**	**174067**	**174068**	**174069**
Pivot angle °	90	180	180	180 + 2x90
End position adjustability °	± 3	± 3	90 90 ± 3	± 3
Mid-position adjustability °	-	-	-	± 3
Torque at 6 bar Nm	58	58	58	58
Nominal operating pressure (min./max.) bar	6	6	6	6
Connecting hose ø mm				
Operating temperature min./max. °C	5-80	5-80	5-80	5-80
Repeat accurancy °	± 0,01	± 0,01	± 0,01	± 0,01
Weight kg	10,2	10,2	10,2	13,9
Axial bearing load F_z N	9000	9000	9000	9000
Radial bearing load M_y Nmm	340	340	340	340

* Number of fluid feed-through RSP32=4; RSP42/RSP52=8 (max. 8 bar)
** Number of signals=RSP32=8; RSP42/52=10 (24V, max. 1A), plug machine side M16, plug tool side M8
*** Number of holders for proximity switches: 3

Accessories RSP-Flex

Magnetic field sensors

Item no.	Design	For
1276722 ▲	3 m cable, 3 open leads	all sizes, all types
1276723 ▲	0,2 m cable, M8x1 connector	all sizes, all types

Proximity switch

Item no.	Design	For
389661	3 m cable, open leads	all sizes, all types
1078808 ▲	0,2 m cable, M8x1 connector	all sizes, all types
680969	without cable, M8x1 connector	all sizes, all types

EASYLOCK zero point clamping system

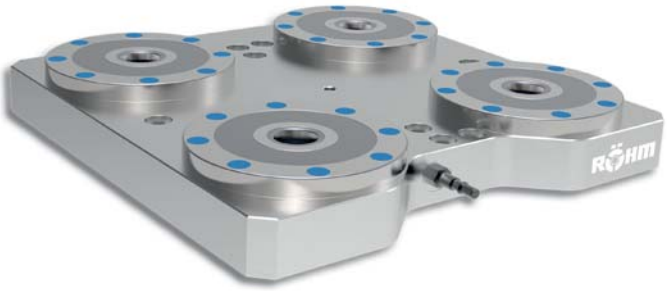

Palletising systems such as the EASYLOCK zero point clamping system from RÖHM achieve a considerable productivity increase. This modular system meets the requirements of customer-specific solutions with the best-possible utilisation of machine capacity. Although the machine tool had to stop for the set-up time until now, the workpiece can now be clamped and positioned on the pallet outside the machine tool. The set-up time is now only limited to loading and unloading the pallet, which happens in seconds. If multiple manufacturing processes are necessary for machining, then the pallet including the workpiece can be used without zero point loss. Due to the robust and rust-resistant construction, EASYLOCK zero point clamping can be used throughout, starting with machining up to the measuring machines.

THE BENEFITS AT A GLANCE

INCREASED PRODUCTIVITY

- Free machine capacity through reduction of set-up time by up to 90%
- Very rapid change of workpiece and clamping fixtures on tilt-free clamping and positioning with long insert

HIGH PRECISION

- Repeat accurancy of < 0.005 mm thanks to precision balls
- Positive-locking self-inhibition unaffected by tensile and lateral forces

HIGHEST MODULARITY

- Modular base carrier design variants for maximum flexibility
- Flexible extension options

The pin system

HOW IT WORKS

With the RÖHM EASYLOCK zero point clamping system, the clamping pin is the interface between the machine table and the workpiece or fixture. The exact positioning guarantees secure clamping. At the same time the resulting machining forces are transferred via the clamping pin to the pressure cup. The high-precision pressure cups of the EASYLOCK system ensure an absolutely secure hold of the workpiece or fixture. The high locking and holding forces make the system suitable for all kinds of use.

Machining with EASYLOCK?

EASYLOCK is ideally suited to all machining processes like grinding, milling, drilling and measuring.

What is meant by holding force?

Holding force is the force at which the pallet still rests securely on the clamping system. This force must not be exceeded during machining.

What is meant by repeat accuracy?

The repeat accuracy gives the tolerance range for the recorded workpiece references when the workpiece is removed and subsequently reclamped. The repeat accuracy of the EASYLOCK system is around < 0.005 mm.

REDUCED SET-UP TIMES BY UP TO 90%

Without palletising system

With EASYLOCK zero point clamping system

Palletising and clamping tools from a single source

THE SYSTEM SOLUTION

As a system supplier, RÖHM offers high quality clamping tools as well as the appropriate palleting solutions with zero point clamping. Coordinated with one another, base carriers and universal pallets support a wide range of combination options together with RÖHM vices, lathe chucks and collet chucks as well as with pneumatically or hydraulically operated chucks and centric vices. The EASYLOCK base carriers can be provided with a variety of options on a modular basis.

BASE CARRIER EASYLOCK

+ optional with position sensing and cleaning function*
+ optional with indexing
+ optional with release control*
+ optional with media feed-through*

INDEXING:
Securing of the individual pallet against turning, so ensuring exact positioning every 90°.

POSITION SENSING INCLUDING CLEANING FUNCTION:
This option includes a ventilation system for cleaning chips and monitoring the contact face.

MEDIA FEED-THROUGH:
Media transmission through the pallet, e.g. for activation of the pneumatically/hydraulically operated centric vices.

RELEASE CONTROL:
Based on automated processes, this communicates to the robot that the insertion pins of the pallet have come loose.

* Further accessories are required (not included in the scope of delivery)

The right pallet makes the difference

PALLET VICES

suitable for NC-Compact vices RKE, RKE-LV, RZM, RKD-M, RKZ-M

PALLET MANUAL CHUCKS

suitable for DURO-T / DURO-TA chucks, CAPTIS-M collet chucks

PALLET PNEUMATIC CENTRIC VICE

suitable for centric vice KZS-P / KZS-PG

PALLET PNEUMATIC CHUCK

suitable for chuck SSP

Technical data - standard carriers

1 PALLET CARRIER

ID	Operation	Diameter	Dimensions	Inside micrometer	Options
1314883	hydraulic	112	200x200x58	-	with indexing
1314882	pneumatic	112	200x200x58	-	with indexing
1313929	hydraulic	138	200x200x58	-	with indexing
1313928	pneumatic	138	200x200x58	-	with indexing

2 PALLET CARRIER

ID	Operation	Diameter	Dimensions	Inside micrometer	Options
1314885	hydraulic	112	200x400x58	200	-
1314884	pneumatic	112	200x400x58	200	-
1313931	hydraulic	138	200x400x58	200	-
1313930	pneumatic	138	200x400x58	200	-

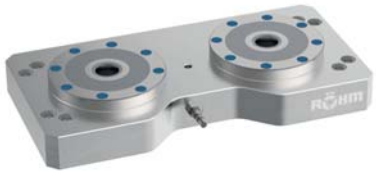

4 PALLET CARRIER

ID	Operation	Diameter	Dimensions	Inside micrometer	Options
1314887	hydraulic	112	350x350x58	200	-
1314886	pneumatic	112	350x350x58	200	-
1313933	hydraulic	138	350x350x58	200	-
1313932	pneumatic	138	350x350x58	200	-

6 PALLET CARRIER

ID	Operation	Diameter	Dimensions	Inside micrometer	Options
1313940	hydraulic	112	350x600x58	200	-
1352604	pneumatic	112	350x600x58	200	-
1313935	hydraulic	138	350x600x64	200	-
1313934	pneumatic	138	350x600x64	200	-

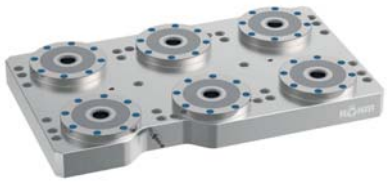

Further sizes on request

Technical data - Pallet

1 PALETT

ID	Diameter	Dimensions
1313941	112	200x200x40
1313936	138	200x200x40

2 PALETT

ID	Diameter	Dimensions
1313942	112	200x400x40
1313937	138	200x400x40

4 PALETT

ID	Diameter	Dimensions
1313943	112	350x350x40
1313938	138	350x350x40

6 PALETT

ID	Diameter	Dimensions
1313944	112	350x600x40
1313939	138	350x600x40

Further sizes on request

The headquarters: our main plant in Sontheim/Brenz

The RÖHM main plant is located in Sontheim/Brenz. In this ultra-modern production facility comprising 41,000 m² optimum conditions have been achieved in order to solve the extensive range of discerning construction and production tasks making the company even better, faster and more efficient in the future.

Sontheim/Brenz

Sontheim | All national and international activities are planned and coordinated at the administrative headquarters in Sontheim. Thanks to the excellent infrastructure and transport routes, this location is ideal for a company relying on perfect product quality as well as maximum flexibility. Furthermore, the region around Sontheim offers another key basis for the success of our company: it is rich in quality awareness and motivated employees with the result that we are ideally prepared for the challenges of the future. The main plant uniquely unites mass production, serial production and customised individual production under a single roof.

Key locations for the company: Dillingen and St. Georgen

Such strong growth on the part of the RÖHM Group is also obviously associated with higher requirements on development and production capacities. The demands of today and tomorrow can be complied with the two facilities in Dillingen and St. Georgen.

Dillingen/Danube

St. Georgen

Plant Dillingen/Danube | This branch plant in Dillingen was put into operation by the RÖHM Group as early as 1953. Thanks to extremely positive development, the plant is subject to constant expansion and modernisation. For this reason, new modern production facilities were built in 1982 and 1991. In 2007 RÖHM built a new production hall for two portal turning and milling machines. This enables machining of workpieces up to 4 metres in length which will secure a leading market position for RÖHM in the future. More than 300 employees are primarily involved in engineering and manufacturing lathechucks, machine vices and special clamping equipment for turning and milling machinery as well as for machining centres.

Engineering and sales department St. Georgen | Apart from standard mandrels, tailor-made solutions for a wide variety of requirements are also manufactured here in this small but accomplished high-tech forge. RÖHM retains mechanical or power-operated mandrels, sliding jaw mandrels and hydraulic mandrels for its customers for tensioning workpieces in drill holes or interior contours.

Always close to our customers.
With locations all around the world.

Customer orientation at RÖHM has less to do with marketing than with attitude. We consider customer proximity as an intensive dialogue with our partners as well as direct presence on key international markets.

Your contacts at RÖHM

Manufacturing and distribution bases

Germany:
RÖHM GmbH
Heinrich-Röhm-Straße 50
89567 Sontheim/Brenz
Tel 0049 73 25 – 16 0
Fax 0049 73 25 – 16 510
info@roehm.biz
www.roehm.biz

RÖHM GmbH
Röhmstraße 6
89407 Dillingen
Tel 0049 90 71 – 5 08-0
Fax 0049 90 71 – 5 08-174
infodlg@roehm.biz

RÖHM GmbH
Feldbergstr. 5
78112 St. Georgen
Tel 0049 – 77 24 – 94 68 12
Fax 0049 – 77 24 – 51 89
Mobil 0152 – 22 88 70 50
stg.info@roehm.biz

Brazil:
RÖHM IND. E COM. DE
FERRAMENTAS DE FIXAÇÃO LTDA.
Rod. Raposo Tavares, Km 14 - Bloco A
2º andar - sala 2 - CEP 05576-100
São Paulo
Tel 0055 – 11 – 37 32 22 22
Fax 0055 – 11 – 37 35 30 97
vendas@rohm.com.br
www.br.roehm.biz

China:
ROEHM China Co., Ltd.
Room 702, Building 24,
No. 518 Xinzhuan Road,
Songjiang District,
201612 Shanghai
Tel 0086 – 21 – 37 70 53 95
Fax 0086 – 21 – 37 70 53 76
roehmcn@roehm.biz

ROEHM WEIDA MACHINERY
(Shandong) Co. Ltd. (Joint Venture)
ADD: 2 Zhonghan Road
Manshan Town Wendeng Shandong
China 264414
Tel 0086 – 631 – 8 54 99 86
Fax 0086 – 631 – 8 54 50 18
lts@weidapeacock.com

France:
RÖHM S. A. R. L.
325 rue Paul Langevin
BP 90204
F-60744 Saint Maximin cedex
Tel 0033 – 344 64 10 00
Fax 0033 – 344 64 00 68
fr.roehm@roehm.biz
www.rohm.fr

Great Britain:
ROHM (Great Britain) LTD.
Unit 12 the ashway centre
Elm cresent Kingston-upon-Thames
Surrey KT 2 6 HH
Tel 0044 – 20 85 49 66 47
Fax 0044 – 20 85 41 17 83
rohmgb@roehm.biz
www.uk.roehm.biz

Italy:
RÖHM Italia S. R. L.
Via Reiss Romoli 17-19
20019 Settimo Milanese (MI)
Palazzo Rothenberger
Tel 0039 – 02 – 92 10 35 31
Fax 0039 – 02 – 92 10 17 53
rohmitalia@roehm.biz
www.roehm-italia.it

Mexico:
RÖHM Products México S. de R.L.
Emilio Garza Meléndez #6606
Col. Campestre Mederos
Monterrey, N.L., México, C.P. 64970
Tel 0052 81 – 9627 – 0686
info@rohm-products.com

Switzerland:
RÖHM Spanntechnik AG
Feldstraße 39, 3360 Herzogenbuchsee
Tel 0041 – 629 56 30 20
Fax 0041 – 629 56 30 29
roehmch@roehm-spanntechnik.ch
www.ch.roehm.biz

Singapore:
RÖHM Asia Pacific Pte. Ltd.
8 Ubi Road 2
#07-10 Zervex
Singapore 408538
Tel 0065 – 64 43 77 48
Mobil 0065 – 83 28 89 80
info@sg.roehm.biz
www.sg.roehm.biz

Slovakia:
RÖHM SLOVAKIA S.R.O.
Partizanska 73
95701 Banovce nad Bebravou
Slovakia
Tel 00421 – 3 87 60 02 22
Fax 00421 – 3 87 60 02 24
Mobil 00421 – 9 14 12 29 32
info@roehm.sk

Spain + Portugal:
RÖHM Iberica S. A.
C/Rejas, No. 9 Nave 11 D
28022 Madrid
Tel 0034 – 91 – 3 13 57 90
Fax 0034 – 91 – 3 13 57 93
rohmiberica@roehm.biz
www.roehm-iberica.es

Taiwan:
Röhm Taiwan Office
3F-3, No3 lane 2
1th Road Taichung industrial Park
Xitun District
Taichung Taiwan
Tel 00886 – 4 23593626
Fax 00886 – 975 105 983

USA:
ROHM Products of America
2500 Northlake Drive
30024 Suwanee, GA
Tel 001 – 770 – 963 – 8440
Fax 001 – 770 – 963 – 8407
rohmusa@roehm.biz
www.us.roehm.biz

Poland:
RÖHM Polska Sp. z o.o.
Aleje Jerozolimskie 424A
05-800 Pruszków
Tel 0048 – 22 – 759 – 59 90
Fax 0048 – 22 – 759 – 59 99
roehmpolska@roehm.biz

Hungary:
RÖHM Hungaria Kft.
Gyár u. 2. (BITEP Ipari Park)
H-2040 Budaörs
Tel 0036 – 209 – 324 597
jozsef.alker@roehm.biz

Presence on all continents from A for Australia to V for Vietnam. You can receive the contact information of our worldwide representations easily through **www.roehm.biz.**

Sales Agents in Germany

Baden-Wuerttemberg:
Thomas Haas
Tel 0 77 25 / 91 48 95
Mobile 0152 / 22 88 71 20
thomas.haas@roehm.biz

Dominik Gotthelf
Mobile 0152 / 22 88 70 93
dominik.gotthelf@roehm.biz

Werner Schmautz
Tel 0 78 02 / 98 27 51
Mobile 0152 / 22 88 70 23
werner.schmautz@roehm.biz

Richard Sedlak
Tel 0 70 21 / 94 98 970
Mobile 0152 / 22 88 70 30
richard.sedlak@roehm.biz

Baden-Wuerttemberg / Rhineland-Palatinate / Saarland:
Michael Schmitz
Tel 00 33 3 88 72 04 03
Mobile 0152 / 22 88 70 18
michael.schmitz@roehm.biz

Baden-Wuerttemberg / Bavaria:
Jochen Staudenmaier
Mobile 0152 / 22 88 71 68
jochen.staudenmaier@roehm.biz

Bavaria:
Jan Birkholz
Mobile 0152 / 22 88 70 14
jan.birkholz@roehm.biz

Gerhard Häutle
Tel 0 90 71 / 7 29 93 22
Mobile 0152 / 22 88 70 15
gerhard.haeutle@roehm.biz

Christian Heigl
Mobile 0152 / 22 88 70 26
christian.heigl@roehm.biz

Bavaria / Thuringia:
Steffen Blatz
Mobile 0152 / 22 88 70 16
steffen.blatz@roehm.biz

North Rhine-Westphalia / Rhineland-Palatinate
Ralf Schnichels
Tel 0 21 52 / 8 97 35 47
Mobile 0152 / 22 88 70 25
ralf.schnichels@roehm.biz

North Rhine-Westphalia:
Friedhelm Schneider
Tel 0 27 62 / 49 07 28
Mobile 0152 / 22 88 70 17
friedhelm.schneider@roehm.biz

North Rhine-Westphalia / Lower Saxony
Thorsten Nolte
Tel 0 27 21 / 12 01 82
Mobile 0152 / 22 88 70 31
thorsten.nolte@roehm.biz

Lower Saxony / Saxony
Susanne Bormann
Mobile 0152 / 22 88 70 88
susanne.bormann@roehm.biz

Berlin, Mecklenburg-Western Pomerania, Brandenburg, Saxony-Anhalt:
Hendrik Seifert
Tel 0 30 / 70 07 24 59
Mobile 0152 / 22 88 70 32
hendrik.seifert@roehm.biz

Hesse:
Klaus Dieter Hofmann
Tel 0 64 06 / 90 67 40
Mobile 0152 / 22 88 70 29
k.d.hofmann@roehm.biz

Hamburg / Bremen / Schleswig-Holstein / Lower Saxony:
René de Jong
Tel 0031 6 24 11 88 84
Mobile 0152 / 22 88 71 53
rene.dejong@roehm.biz

Agents worldwide

Algerien:
RÖHM S.A.R.L.
325, rue Paul Langevin
60740 St. Maximin, FRANCE
Tel 0033 / 344 64 10 00
Fax 0033 / 34 64 00 68
fr.roehm@roehm.biz
www.rohm.fr

Argentina:
Himaq S.R.L.,
Venezuela 3652,
1603 Villa Martelli
Prov. Buenos Aires
Tel 00 541 / 147 093 505,
Fax 00 541 / 147 093 472
himaq@himaq.com.ar

Australia:
RÖHM Asia Pacific Pte. Ltd.
8 Ubi Road 2
#07-10 Zervex
Singapore 408538
Tel 0065 – 64 43 77 48
Mobil 0065 – 83 28 89 80
info@sg.roehm.biz
www.sg.roehm.biz

FISHER LAMCO PTY LTD
Tel 00 61 / 2 4968 7200
mark.hughes@fisherlamco.com.au

Austria:
Richard Schörkhuber
Lichtenhof 2 b
8511 St. Stefan ob Stainz
Tel 00 43 / 34 63 / 8 15 10
Fax 00 43 / 34 63 / 8 15 60
Mobil 00 43 / 664 / 9 23 77 10
richard.schoerkhuber@roehm.biz

Schachermayer GmbH,
Schachermayer Str. 2
Postfach 3000, 4021 Linz
Tel 00 43 / 732 / 65 99-0
Fax 00 43 /732 / 65 99 14 44
maschinenmetall@schachermayer.at

Lackner u. Urnitsch GmbH
Bahnhofgürtel 37, 8020 Graz
Tel 00 43 / 316 / 71 14 80-0
Fax 00 43 / 316 / 71 14 80 39
lackner@urnitsch.at

Haberkorn Ulmer GmbH
Hohe Brücke, 6961 Wolfurt
Tel 00 43 / 55 74 / 69 5-0
Fax 00 43 / 55 74 / 69 5-99
nfo.wolfurt@haberkorn.com

Metzler GmbH u. Co. KG
Oberer Paspelsweg 6-8, 6830 Rankweil
Tel. 00 43 / 55 22 / 7 79 63 - 0
Fax 00 43 / 55 22 / 7 79 63 - 6
office@metzler.at

Belgium:
RÖHM S.A.R.L.
325, rue Paul Langevin
60740 St. Maximin, FRANCE
Tel 0032 495 72 73 99
Fax 0032 42 86 69 48
frederik.hamels@roehm.biz
www.rohm.fr

BELTRACY
Bergensesteenweg 189
1600 Sint-Pieters-Leeuw
BELGIUM
Tel. 00 32 / 25 43 68 90
Fax 00 32 / 25 38 59 10
info@beltracy.be
www.beltracy.be

Bosnia-Herzegovina:
Elaphusa d.o.o
Augusta Piazze 9
10000 Zagreb (Croatia)
Tel 00 38 / 5 13 69 51 38
Fax 00 38 / 5 13 63 95 30
kruhek@zg.t-com.hr

Canada:
ROHM Products of America
2500 Northlake Drive, 30024 Suwanee, GA
Tel 001 – 770 - 963 - 8440
Fax 001 – 770 - 963 - 8407
rohmusa@roehm.biz
www.us.roehm.biz

(Greiftechnik)
Sempress Canada Inc.
L5L 5Y6 Mississauga, Ontario
Tel 001 905 606 2324
Fax 001 905 606 2544
sempress@sempress.ca
www.sempress.ca

Chile:
Robert Kralemann
SERVICOMP Ltda.
Av. Departamental 1595
La Florida - Santiago
Tel 00 56 / 2 / 8 89 47 00
rkralemann@gmail.com

Colombia:
Imocom S. A.
Apartado Aereo 12287, Bogota D. E. 6
Tel 00 57-1 / 2 62 38 00
Fax 00 57-1 / 2 62 49 82
imocom@imocom.com.co

Costa Rica:
Servicios Centroamericanos, S.A.
625 Mts. Este del Parque de Tibás,
frente a Autos La Florida, San José, Costa Rica
P.O. Box : 4711-1000 San José, Costa Rica
Tel 00 506 / 2 40 11 11
Fax 00 506 /2 40 22 22
sercensa@sercensa.com

Croatia:
Elaphusa d.o.o
Augusta Piazze 9
10000 Zagreb (Croatia)
Tel 00 38 / 5 13 69 51 38
Fax 00 38 / 5 13 63 95 30
kruhek@zg.t-com.hr

PFEIFER - TTI D.O.O.
40000 Cakovec, Croatia
Tel 00 385-9/ 83 03 52 2
Fax 00 385-1/ 36 39 53 0
marijan.pfeifer@pfeifer-tti.hr

Czech Republic:
RÖHM SLOVAKIA S.R.O.
Partizanska 73
95701 Banovce nad Bebravou
Slovakia
Tel 00421 – 3 87 60 02 22
Fax 00421 – 3 87 60 02 24
Mobil 00421 - 9 14 12 29 32
info@roehm.sk

Jan Vyslouzil
Jiráskova 551
76824 Hulin
Tel. 00 420 / 5 73 35 18 00
janvyslouzil@iol.cz

Denmark:
RÖHM Værktoj A. S.
Gunnekær 2,
2610 Rødovre
Tel 0045 – 36 – 41 22 66
Fax 0045 – 36 – 41 44 72
info@roehm.dk
www.roehm.dk

Ecuador:
Inocencio Ferreira Alexandre
Duran, Ecuador
Tel 00 593 - 4 / 2807323
Fax 00 593 - 4 / 2807799
inocencioferreira@gmail.com

Egypt:
Dirk Jaegemann Trade Agency GmbH&Co.KG
28279 Bremen
Tel 0049 / 42 18 39 21 30
Fax 00 49 / 42 18 39 89 21
info@djta.de

Finland:
(Clamping technology - manual)
Teräskonttori Oy,
Muuntotie 3,
1510 Vantaa
Tel 00 358 / 10 219 22 00
Fax 00 358 / 10 219 22 45
info@teraskonttori.fi

Oy Interfii Ltd.
Teollisuuskatu 35-39 LH4
20520 Turku, Y-tunnus 2374026-3
Tel 00 358 / 2 01 47 45 00
Fax 00 358 / 2 01 47 45 01
info@interfii.com

Greece:
Stefanos Papadopoulos
Kifisiasstr. 15, 54655 Thessaloniki
Tel 00 30 / 23 10-48 87 58
Fax 00 30 / 23 10-48 87 53
ST-papas@otenet.gr

Hungary:
Fairtool GmbH
Koebanyai ut. 47/B, H-1101 Budapest
Tel 00 361 / 2608025
fairtool@fairtool.hu

India:
Röhm Clamping Technologies Pvt. Ltd.
No.14A-1, Belmar Industrial Estate,
Nagasandra Post, (Off Andrahalli Main Road)
Bangalore-560 073, Karnataka
Tel : 0091-80-28372233
kthomas_64@yahoo.com

Indonesia:
RÖHM Asia Pacific Pte. Ltd.
8 Ubi Road 2
#07-10 Zervex
Singapore 408538
Tel 0065 – 64 43 77 48
Mobil 0065 – 83 28 89 80
info@sg.roehm.biz
www.sg.roehm.biz

Iran:
Sakht Abzar Pars Co. (SAP)
No. 19/4 Saeb Tabrizi St.,
North Abbas Shirazi Ave,
Molla Sadra Ave., Tehran post code 19917
Tel. 00 98 / 21 / 88 03 18 88
Fax 00 98 / 21 / 88 03 77 33
sales@sap-iran.com

Ireland:
ROHM (Great Britain) LTD.
Unit 12 the ashway centre
Elm cresent Kingston-upon-Thames
Surrey KT 2 6 HH
Tel 0044 - 20 85 49 66 47
Fax 0044 - 20 85 41 17 83
rohmgb@roehm.biz
www.uk.roehm.biz

Iceland:
Fossberg Ltd.
Dugguvogi 6, 104 Reykjavik
Tel. 00 354 / 57 57 606
E-mail: fossberg@fossberg.is

Israel:
ETMOS Tool Distributing Co. Ltd.
34 HAHOFER ST., 5811702 Holon
Tel. 00 972 - 3 / 55 81 933
Fax 00 972 - 3 / 55 81 934
etmos@etmos.co.il

Japan:
RÖHM Asia Pacific Pte. Ltd.
8 Ubi Road 2
#07-10 Zervex
Singapore 408538
Tel 0065 – 64 43 77 48
Mobil 0065 – 83 28 89 80
info@sg.roehm.biz
www.sg.roehm.biz

Takeda Trade Co., Ltd.
NAKANOSHIMA DAI-BUILDING 603, 3-3-23,
NAKANOSHIMA, KITA-KU
530-6106 OSAKA
Tel. 00 81 3 6806 0757
hata@takeda-trade.co.jp

(Gripping technology)
Sempress Canada Inc.
L5L 5Y6 Mississauga, Ontario
Tel 001 905 606 2324
Fax 001 905 606 2544
sempress@sempress.ca
www.sempress.ca

Latvia:
RÖHM GmbH
Heinrich-Röhm-Straße 50
89567 Sontheim/Brenz
Tel 0049 73 25 – 16 0
Fax 0049 73 25 – 16 510
info@roehm.biz
www.roehm.biz

Agents worldwide

Luxemburg:
RÖHM S.A.R.L.
325 rue Paul Langevin
60740 St. Maximin, FRANCE
Tel 00 33 / 3 44 64 10 00
Fax 00 33 / 3 44 64 00 68
fr.roehm@roehm.biz

Malaysia:
RÖHM Asia Pacific Pte. Ltd.
8 Ubi Road 2
#07-10 Zervex
Singapore 408538
Tel 0065 – 64 43 77 48
Mobil 0065 – 83 28 89 80
info@sg.roehm.biz
www.sg.roehm.biz

YOMAX SDN BHD
Tel. 00 604 643 8740
bbtan@yomax.com.my

Marocco:
RÖHM S.A.R.L.
325, rue Paul Langevin
60740 St. Maximin, FRANCE
Tel 0033 / 344 64 10 00
Fax 0033 / 34 64 00 68
fr.roehm@roehm.biz
www.rohm.fr

Macedonia:
G.T.M.Co. d.o.o. Export - Import
Autoput Bg - Zg br. 22
11080 Beograd, Srbija i Crna Gora
Tel 00 381 / 1 13 14 90 24
Fax 00 381 / 1 13 14 90 21
vladimir.rackovic@gtmco.rs

New Zealand:
RÖHM Asia Pacific Pte. Ltd.
8 Ubi Road 2
#07-10 Zervex
Singapore 408538
Tel 0065 – 64 43 77 48
Mobil 0065 – 83 28 89 80
info@sg.roehm.biz
www.sg.roehm.biz

Trade Tools Ltd
23 Olive Road, Penrose
PO Box 112114
Auckland 1642, New Zealand
Tel 0064 9 525 88 82
sales@tradetools.co.nz

Netherlands:
(Clamping technology - manual)
Boorwerk B.V.,
Flevolaan 52 A,
Industrieterrian Noord
1382 JZ Weesp
Tel 00 31 / 294 / 43 20 50
Fax 00 31 / 294 / 43 21 52
mail@boorwerk.nl

(Clamping technology - power operated)
RÖHM S. A. R. L.
325 rue Paul Langevin
BP 90204
F-60744 Saint Maximin cedex
Tel 0033 – 344 64 10 00
Fax 0033 – 344 64 00 68
fr.roehm@roehm.biz
www.rohm.fr

Norway:
Ing. Yngve Ege A/S
Ryenstubben 5
0679 Oslo 11
Tel 00 47 / 23 24 10 00
Fax 00 47 / 23 24 1001
ege@ege.no

Peru:
Sucesión Carlos Kaufmann
Lima 27 San Isidro, Peru
Tel 00 51-14 / 228631
Fax 00 51-14 / 424130
kaufmann@terra.com.pe

Philippines:
RÖHM Asia Pacific Pte. Ltd.
8 Ubi Road 2
#07-10 Zervex
Singapore 408538
Tel 0065 – 64 43 77 48
Mobil 0065 – 83 28 89 80
info@sg.roehm.biz
www.sg.roehm.biz

Portugal:
RÖHM Iberica S. A.
C/Rejas, No. 9 Nave 11 D
28022 Madrid
Tel 0034 / 91 / 3 13 57 90
Fax 0034 / 91 / 3 13 57 93
rohmiberica@roehm.biz
www.rohm-iberica.es

Romania:
KSN Technik Srl
Str. Tabacarilor 15B/103
400139 CLUJ-NAPOCA, Romania
Tel 00 40 / 264 / 449 - 533
Fax 00 40 / 264 / 449 - 533
office@ksntechnik.ro

Russia:
Promintech Zoo
Leninsky PR.151, OF.432
196247 St. Petersburg
Russia
Tel 007 812 703 7418
Tel 007 812 718 8255
niktechnika@prominteh.ru

OOO TORENCO
456318 Miass Chelyabinsk Region,
Russia
Tel 007 / 951 815 - 8004
Torenco2010@mail.ru

OOO T.W.L -Group
Kosmonawta wolkowa 5, stroenie 1,
127299 Moscow, Russia
Tel 007 / 495 / 5 04 72 39
007 / 903 / 1 03 29 02
Fax 007 / 495 / 9 26 95 39
sales@twl-group.ru

Saudi Arabia, UAE, Bahrain, Kuwait, Oman, Quatar, Kazakhstan, Lebanon, Bahrain:
RÖHM Asia Pacific Pte. Ltd.
8 Ubi Road 2
#07-10 Zervex
Singapore 408538
Tel 0065 – 64 43 77 48
Mobil 0065 – 83 28 89 80
info@sg.roehm.biz
www.sg.roehm.biz

Sweden:
(Clamping technology - power operated)
Techpoint Systemteknik AB
Nyponvaegen 4
19144 Sollentuna
Tel 00 46 / 86 23 13 30
Fax 00 46 / 86 23 13 45
info@techpoint.se

(Clamping technology- manual)
Luna AB
Sandbergsvägen 3,
44180 Alingsås
Tel. 00 46 / 322 60 60 00
Fax 00 46 / 322 60 62 03
info@luna.se

(Gripping technology)
Robot System Products AB
Isolatorvägen 4,
72137 Västeras
Tel 00 46 021 816 603
Fax 00 46 021 816 601
contact@robsyspro.com

Serbia-Montenegro:
G.T.M.Co. d.o.o. Export - Import
Autoput Bg - Zg br. 22
11080 Beograd, Srbija i Crna Gora
Tel. 00 381 / 1 13 14 90 24
Fax 00 381 / 1 13 14 90 21
vladimir.rackovic@gtmco.rs

Singapore:
RÖHM Asia Pacific Pte. Ltd.
8 Ubi Road 2
#07-10 Zervex
Singapore 408538
Tel 0065 – 64 43 77 48
Mobil 0065 – 83 28 89 80
info@sg.roehm.biz
www.sg.roehm.biz

GP System Singapur PTE LTD
No. 51, Bukit Batok Crescent,
#04-04/05 Unity Centre,
Singapur 658077
Tel. 00 65 / 68 61 - 26 63
Fax 00 65 / 68 61 - 35 00
enquiry@gpsystem.com

INTEC Precision Equipment Pte Ltd
No. 7 Gul Street 4,
Singapore 629237
Tel 0065 68 62 10 90
intec@intecsg.com

Slovenia:
Elaphusa d.o.o
Augusta Piazze 9
10000 Zagreb (Croatia)
Tel 00 38 / 5 13 69 51 38
Fax 00 38 / 5 13 63 95 30
kruhek@zg.t-com.hr

B T S COMPANY TRGOVINA IN ZASTOPANJE, D.O.O.
Bratislavka 5
1000 Ljubljana
Tel 00 38 / 6 1 584 14 40
masa.bitenc@bts-company.si

Slovakia:
RÖHM SLOVAKIA S.R.O.
Partizanska 73
95701 Banovce nad Bebravou
Slovakia
Tel 00421 – 3 87 60 02 22
Fax 00421 – 3 87 60 02 24
Mobil 00421 - 9 14 12 29 32
info@roehm.sk

South Africa:
Supra Tooling and Accessoires (Pty) Ltd
P.O. Box 1892
1460 Boksburg, Gauteng
South Africa
Tel. 0027 6467 4284
Fax 0027 11918 5492
supratoolig@mweb.co.za
www.supratooling.co.za

Tooling Promotions
P.O. Box 3989
Vanderbijlpark 1900, Gauteng
South Africa
Tel 0027 016 931 1266
Fax 0027 016 931 1269
info@toolingpromotions.co.za
www.toolingpromotions.co.za

South Korea:
RÖHM Asia Pacific Pte. Ltd.
8 Ubi Road 2
#07-10 Zervex
Singapore 408538
Tel 0065 – 64 43 77 48
Mobil 0065 – 83 28 89 80
info@sg.roehm.biz
www.sg.roehm.biz

CHEONG DO TRADING CO., LTD.
NO. 7, GUL STREET 4, SINGAPORE 629237
Tel 0082 2 26 78 41 55
Fax 0082 2 26 72 54 83
cdmt@chol.com

ENT Co., Ltd.
Zip code 15090
42-404, 204, Gongdan 1-daero, Siheung-si,
Gyeonggi-do, Korea
Tel 0082 31 430 67 89
roehm1909@gmail.com

Thailand:
RÖHM Asia Pacific Pte. Ltd.
8 Ubi Road 2
#07-10 Zervex
Singapore 408538
Tel 0065 – 64 43 77 48
Mobil 0065 – 83 28 89 80
info@sg.roehm.biz
www.sg.roehm.biz

Krasstec Company Limited
42-404-204, GONGDAN 1-DAERO,
SIHEUNG-SI, GYEONGGI-DO, SEOUL
15090, KOREA
Tel. 00662 732 1144
chaithat@krasstec.com

Tunisia:
RÖHM S.A.R.L.,
325 rue Paul Langevin
60740 St. Maximin, FRANCE
Tel. 00 33 / 3 44 64 10 00
Fax 00 33 / 3 44 64 00 68
fr.roehm@roehm.biz

Turkey:
Sintek Mühendislik Makina San.
Ve Tic. Ltd. Sti.
Tarabya Mahallesi
Yumak Sok. No: 3/A1
34457 SARIYER – ISTANBUL
Tel. 00 90 / 212 / 2 99 61 84
Fax 00 90 / 212 / 2 99 56 75
sinan.onurlu@sintekmuhendislik.com

Ukraine:
T.W.L.-JUGA-Service
41, Gradonochalnitzkaya str. 1
65005 Odessa, Ukraine
Tel. 00380 / 48 / 79 5 85 64
Fax 00380 / 48 / 79 4 94 68
jugtech@twlweb.biz

Venezuela:
Hartung Hnos. Sucr. C. A.,
Apartado 2480
Caracas 1010-A / Venezuela
Tel. 00 58 / 212 / 54 20 820
Fax 00 58 / 212 / 54 19 449
claus@hartung.com.ve

Maquinaria Diekmann S.A.
AV. Humboldt – Las Acacias
CARACAS 1040 / VENEZUELA
Tel 00 58 / 212 / 633 36 30 or
Tel 00 58 / 212 / 633 62 30
Fax 00 58 / 212 / 633 22 62 or
Fax 00 58 / 212 / 632 80 13
purchase@diekmann.com.ve

Vietnam:
RÖHM Asia Pacific Pte. Ltd.
8 Ubi Road 2
#07-10 Zervex
Singapore 408538
Tel 0065 – 64 43 77 48
Mobil 0065 – 83 28 89 80
info@sg.roehm.biz
www.sg.roehm.biz

HIEP MINH PHAT TRADING CO LTD
Tel 0084 8 542 70 442
lequochiep@hiepminhphat.com.vn

General Terms of Sale and Delivery

§ 1 Offer, conclusion of contract and contractual contents

1. Our Terms of Sale shall apply exclusively; we do not recognise contradictory terms and conditions or terms and conditions which deviate from our Terms of Sale unless we had explicitly approved their validity in writing. Our Terms of Sale shall also apply if we carry out the delivery to the buyer without reservation in the knowledge of contradictory terms and conditions of the buyer or terms and conditions which deviate from our Terms of Sale.
2. Our Terms of Sale shall only apply towards an entrepreneur within the meaning of Section 14 BGB [German Civil Code].
3. Our General Service Terms shall apply with precedence over these Terms of Sale in the respective valid version in cases, which comprise the service offer of RÖHM GmbH.
4. Our offers are always to be understood as invitatio ad offerendum and are therefore without obligation insofar as they have not explicitly been described as binding. The contract shall only be concluded with our written confirmation and in line with its contents and – if a written confirmation is missing – by the service/delivery. If a delivery/service is carried out immediately without a confirmation then the invoice shall at the same time be deemed as an order confirmation.
5. Costs for the production of drawings for special constructions are to be borne by the orderer insofar as the offer does not lead to an order for reasons, for which we are not responsible.
6. All details concerning weights, dimensions, services and technical data, which are contained in our printed material, catalogues, price lists or in other contractual documents, merely serve for purposes of information and are only binding insofar as they are explicitly described as binding.
7. We reserve the right to make construction and form changes to the object of contract insofar as no changes are made hereto, which are deemed unreasonable for the orderer.
8. The documentation consists of the compilation drawing, the BOM with marking of the parts subject to wear and tear and spare parts as well as assembly instructions upon request. Respectively in German and/or, upon request, in English. This free documentation will be supplied in a digital form. The PDF format shall apply to drawings, BOMs and texts. Any scope of documentation beyond this is liable to costs respectively requires a special agreement. The documents may not be reproduced in full or in part, not made accessible to third parties or used for any other purpose apart from that for which they were handed over to the customer without our prior written authorization.
9. The corresponding measurement methods for tests, with which certain temperatures, times and other measured or control values should apply, must be stipulated before start of delivery and recognised by both parties. If no stipulation is made the measurement methods usually applied by RÖHM shall apply, we shall provide the details thereof upon request.
10. Samples will only be supplied against payment and owing to a separately placed order.
11. Assurances, collateral agreements and amendments to the contract require a written form in order to be valid. This requirement cannot be waived orally.
12. Placed orders are irrevocable unless the supplier has approved the revocation in writing.
13. In case of export business the delivery is carried out at the conditions agreed on the order confirmation, the international regulations for the interpretation of customary contractual forms shall apply in addition (incoterms 2010 of the International Chamber of Commerce, respective valid status).
14. Our General Business Terms shall apply to the RÖHM online shop with the following supplementations:
a) The offer on the part of the customer is submitted binding as soon as the customer orders the products in the shopping basket by using the function „binding order".
b) A purchase in the online shop is only possible if the customer actively agrees to our General Business Terms.
c) Mistakes and errors with regard to the goods availability, prices and other details and data excepted. Diagrams in the online shop are merely for the purpose of illustration respectively as visual aids; the description is binding.
d) We will inform the customer if the product ordered by the customer is temporarily or permanently not available.
15. Our „product information", technical information leaflets as well as other product-specific publications shall apply in addition to the General Business Terms. These are always to be complied with in their current version.

§ 2 Prices

1. In the absence of special written agreements the prices in the Federal Republic of Germany shall apply „carriage paid" recipient plus the statutory value added tax. With export business the object of delivery shall be deemed as sold „ex works" if nothing is determined in the contract concerning the type of sale. A processing fee of EUR 1.00 will be charged for individual orders with a goods value of less than EUR 150.00 net, a processing fee of EUR 30.00 for orders with a goods value of less than EUR 50.00 net respectively plus the applicable rate of value added tax. This shall apply to deliveries within the domestic country and overseas. At the customer's request the goods can be delivered to an alternative shipping address against a logistics fee in the amount of EUR 10.00.
2. We would like to point out that we will only carry out the shipment at the customer's request. This shall have no effect on the regulations according to Section 5.
3. We shall charge the prices valid upon conclusion of the contract, which are based on the cost factors which are valid at this time. Should these cost factors (in particular material, wages, energy, etc.) change between conclusion of the contract and the agreed delivery time then we are entitled to make a corresponding change to the prices. In case of export business the supplier is entitled to terminate the contract extraordinarily with regard to the part of the order that has not yet been completed or to adjust the prices for this accordingly in the event of a substantial devaluation in the currency, in which the order is concluded.
4. In case of conclusion ex works the goods will be conveyed at the costs and risk of the orderer. With all other consignments the provisions stipulated in the incoterms 2010, respective valid status, will apply with regard to insurance and the assumption of risks.
5. We will inform the buyer of our production quantity for parts/products, which are produced especially according to the buyer's requests. The buyer undertakes to purchase the quantities confirmed to him.
6. Excess and shortfalls in deliveries of up to 5 %, with special tools up to 10 %, at least however 2 pieces, are permitted and do not substantiate any quality defects. The respective delivery will be charged.

§ 3 Terms of payment

1. In the absence of a special agreement the payment is to be made without any deduction free paying agent within 10 days after the invoice date – also with partial deliveries.
2. In case of default of payment interest will be charged in the amount of the credit costs charged by banks, at least however interest in the amount of 9 % above the respective base lending rate of the ECB.
3. In case of export business the payments are to be made in line with the agreed terms of payment.
4. Costs of the payment transactions, in particular bank charges for overseas transfers to us, shall principally be for the expense of the customer.

§ 4 Delivery time

1. The start of the delivery deadline stated by us presumes the clarification of all technical questions. Delivery dates stated by us are – insofar as not explicitly agreed or described as binding – non-binding and shall merely represent an expected delivery date.
2. The compliance with our delivery obligation further presumes the timely and proper fulfilment of the buyer's obligations, in particular the compliance with the agreed terms of payment. The right is reserved to the plea of the unfulfilled contract.
This right shall also consist of obligations from previous deliveries which have not been satisfied in full.
3. The delivery deadline shall begin with the sending of the order confirmation, however not before the provision of the documents, permit, releases, etc., which are to be procured by the orderer, as well as not before the receipt of the agreed down payment.
4. If a binding delivery date has been agreed then the supplier also has to deliver within the deadline. The delivery deadline shall have been adhered to if the object of delivery has left the plant by the time it expires or notification has been given that the object is ready for delivery, the right is reserved to the timely and correct self-delivery. If the orderer changes his order with regard to parts of the delivery then the delivery deadline shall only begin to apply new again with the confirmation of the change.
5. Force majeure, war, civil commotion, strike, lock-out or measures of authorities, no matter for what reason, which oppose a delivery, as well as deficiencies of raw materials, of transport means as well as theft – also at the sub-suppliers – shall release the supplier from the obligation to deliver within the agreed deadline. The orderer is to be notified immediately of the occurrence of the event and of the expected implications.
6. Deliveries before expiry of the delivery time and in reasonable parts are permitted.
7. The adherence to the delivery time presumes the fulfilment of the orderer's contractual obligations.
8. The regulations of Subclause 10 shall apply in the event of the delay in delivery or impossibility.

§ 5 Passing of risk and acceptance

1. The risk shall pass to the orderer by no later than with the despatch of the delivered parts also if partial deliveries are made or we have taken over other services e.g. the shipping costs or delivery to the location and installation.
2. At the orderer's request the shipment shall be insured by us against theft, damages caused by breakage, transport, fire and water and other insurable risks at his costs.
3. If the shipment is delayed as a result of circumstances, for which the orderer is responsible, then the risk shall pass to the orderer from the day upon which the goods are ready for shipment; however we are obliged to procure the insurances, which he requests, at the request and costs of the orderer.
4. Delivered objects are, even if they feature insignificant features, to be accepted by the orderer irrespective of the rights from Section 8.

§ 6 Delay in acceptance, order on call

1. If the orderer does not accept the object of contract within the deadline we are entitled to set him a reasonable final deadline, to dispose otherwise over the object after its expiry and to supply the orderer with a reasonably extended deadline. Our rights to cancel the contract under the pre-requisites of Section 326 BGB and to request damages owing to the non-fulfilment shall remain unaffected hereby. If we request damages owing to non-fulfilment we can request 40 % of the agreed price plus value added tax as compensation unless the orderer proves less damages. We reserve the right to assert higher actual damages.
2. Orders, which are confirmed by us on call, must – insofar as nothing special has been agreed – be accepted by no later than within one year from the order date. The same shall apply in case of date reservations or sustainable „on call position". Subclause 6.1 shall apply accordingly in case the goods are not called within the stated deadline.

§ 7 Reservation of title

1. The objects of the deliveries (reserved goods) shall remain our property until the fulfilment of all claims to which we are entitled against the buyer from the business relationship. Insofar as the value of all security rights, to which we are entitled against the buyer, exceed the amount of all secured claims by more than 10 %, we will release a corresponding part of the security rights at the buyer's request.
2. During the existence of the reservation of title the buyer is prohibited from a pledge or assignment as collateral and the resale only permitted for resellers in the customary course of business and only under the condition that the reseller receives a payment from his customer or stipulates the reservation that the property shall only pass to the customer when he has satisfied his payment obligations.
3. In case of attachments, seizures or other disposals or interventions of third parties the buyer has to inform us immediately so that we can file an action according to Section 771 ZPO [German Code of Civil Procedure]. Insofar as the third party is not in the position to reimburse us the court and out-of-court costs of an action according to Section 771 ZPO, the buyer will be liable for the loss incurred to us.
4. The buyer undertakes to treat the object of purchase with due care and attention; he is in particular obliged to sufficiently insure these at the value as new at his own costs against damages caused by fire, water and theft. Insofar as maintenance and inspection work is necessary the buyer must carry this out in time at his own costs.

General Terms of Sale and Delivery

5. In case of breaches of duty by the buyer, in particular with default of payment we are entitled to cancellation and to take the goods back; the buyer is obliged to hand the goods over. The taking back of goods respectively the assertion of the reservation of title does not require any cancellation of the supplier; these acts or an attachment of the reserved goods by us shall not represent a cancellation of the contract unless we had explicitly declared this.
6. If the buyer has resold the object of purchase in the ordinary course of business then he shall hereby now already assign all claims to us in the amount of the final invoice amount (including value added tax) of our claim, to which he is entitled from the resale against his buyers or third parties, irrespective of whether the object of purchase has been resold without or after processing. The buyer shall also remain authorized to collect this claim after the assignment. Our authorization to collect the claim ourselves shall remain unaffected hereby. However, we undertake not to collect the claim as long as the buyer satisfies his payment obligations from the collected proceedings, is not in default of payment and in particular no application has been filed for the opening of insolvency proceedings or payments have been suspended. If this is however the case we can request that the buyer announces the assigned claims and their debtors to us, provides us all details which are necessary for the collection, hands over the associated documents and informs the debtors (third parties) of the assignment.
7. The processing or conversion of the object of purchase by the buyer is always carried out on our behalf. If the object of purchase is processed with other objects, which do not belong to us, then we shall acquire the co-ownership to the new object in the ratio of the value of the object of purchase (end invoice amount, including value added tax) to the other processed objects at the time of the processing. Incidentally, the same shall apply to the object produced by processing as to the object of purchase delivered under reservation.
8. If the object of purchase is inseparably mixed with other objects that do not belong to us then we shall acquire the co-ownership to the new object in the ratio of the value of the object of purchase (end invoice amount, including value added tax) to the other mixed objects at the time of the mixing. If the mixing is carried out to the extent that the object of the buyer is to be seen as the main object then it shall be deemed as agreed that the buyer assigns us the pro rata co-ownership. The buyer shall store the thus produced sole ownership or co-ownership on our behalf.

§ 8 Quality defects

We shall be liable for quality defects as follows:
1. All those parts or services are to be subsequently improved free of charge at our choice, delivered or provided new, which – irrespective of the operating duration – feature a quality defect if this cause existed already at the time when the risk was passed.
2. Claims for quality defects shall become statute-barred in 12 months. The deadline will begin with the passing of the risk (Subclause 6).
3. The buyer has to report quality defects to us immediately in writing.
4. In case of reports of defects payments of the buyer may be withheld in a scope, which is in reasonable relation to the occurred quality defects. If the defect is unjustifiably reported we are entitled to request reimbursement of the expenses incurred to us by the buyer.
5. We are first of all always to be granted the opportunity for the subsequent fulfilment within a reasonable period of time.
6. If the subsequent fulfilment fails the buyer can – irrespective of possible claims for damages – cancel the contract or reduce the remuneration. The buyer can only request reimbursement for fruitless expenses if we are responsible for the defect owing to wilful intent or gross negligence.
7. Defects shall not exist with an only insignificant deviation from the agreed conditions, with an only insignificant impairment to the usability, with natural wear and tear or damages, which are caused after the risk has passed as a result of faulty or negligent treatment, excessive use, unsuitable operating equipment or owing to special external influences, which are not presumed according to the contract, as well as with software faults that cannot be reproduced. If improper changes or repair work is carried out by the buyer or by third parties then this and the thus incurred consequences shall not substantiate any defects either. The same shall apply if our stipulations concerning the handling and other instructions are not complied with and a proper maintenance is not carried out.
8. Claims of the buyer owing to the expenses, which are necessary for the purpose of the subsequent fulfilment, in particular transport, route, labour and material costs, are excluded if the expenses increase, because the object of the delivery has subsequently been taken to another location than the buyer's branch unless the transportation corresponds with its use as intended.
9. Statutory claims for recourse of the buyer against us shall only exist to the extent that the buyer has not reached any agreements with its buyer that go beyond the statutory claims for defects.
10. Subclause 9 shall apply to claims for damages. Further or other than claims regulated in this Subclause or in Subclause 9 owing to a quality defect are excluded.

§ 9 Industrial property rights and copyrights, defects of title

Insofar as not otherwise agreed, we are obliged to merely provide the delivery in the country of the place of delivery free of industrial property rights and copyrights of third parties (hereinafter property rights). Insofar as a third party asserts justified claims owing to the infringement of property rights due to deliveries provided by us and used as per contract against the buyer, we shall be liable towards the buyer as follows within the deadline determined in Subclause 8.2:
1. We will, at our choice and at our costs, either obtain a right of use for the deliveries concerned, change these so that the property right is not infringed, or exchange these. If this is not possible for us at reasonable conditions, the buyer shall be entitled to the statutory rights to cancellation or reduction. The buyer can only request reimbursement for fruitless expenses if we are responsible for wilful intent or gross negligence. Our obligation to pay compensation is oriented to Subclause 10.
2. The afore-mentioned obligations shall only exist if the buyer informs us immediately in writing about the claims asserted by third parties, does not recognise an infringement and we reserve the right to all defence measures and settlement negotiations. If the buyer discontinues the use of the delivery for reasons to minimise damages or for other important reasons he undertakes to inform the third party that the discontinuation of the use is not associated with a recognition of an infringement of a property right.
3. Claims of the buyer are excluded insofar as he is responsible for the infringement of property right.
4. Claims of the buyer are further excluded insofar as the infringement of property right is caused by special stipulations of the buyer, due to an application that is not foreseeable for us or by the fact that the delivery is changed by the buyer or is used together with products not delivered by us.
5. In the event of infringements of property rights the provisions of Subclauses 8.4, 8.5 and 8.9 shall apply accordingly to the claims of the buyer regulated in Subclause 13.
6. Further or other claims of the buyer against us or our vicarious agents owing to a defect of title than those regulated in this Subclause 9 are excluded.

§ 10 Joint and several liability

1. Claims of the buyer for damages – irrespective of the legal nature of the asserted claim – are excluded.
2. Excluded from this are:
a) Damages owing to the breach of essential contractual obligations. Deemed as essential are such contractual obligations, the fulfilment of which makes the proper execution of the contract possible at all and on the compliance with which the contractual partner may as a rule rely and depend on.
b) Damages from the injury to life, the body or the health if we are responsible for the breach of obligation.
c) For other damages, which are due to a wilful or grossly negligent breach of duty, whereby our breach of duty is deemed equivalent to that of our legal representatives or vicarious agents.
d) Liability according to the ProdHaftG [German Product Liability Act]
3. A change to the burden of proof for the disadvantage of the buyer is not associated with the afore-mentioned regulations.
4. Insofar as the liability for damages is excluded or limited against us, this shall also apply with regard to the personal liability for damages of our employees, our commercial agents and our vicarious agents.

§ 11 Obligations of the buyer to provide assistance

1. Assistance services of the buyer, which are explicitly or tacitly agreed within the framework of the contract, shall be carried out without a special remuneration unless explicitly otherwise agreed.
2. The buyer is obliged to inform us about all facts in time, from which it can be derived that goods and products in stock in our company, which we have made available with regard to the production capacities reported to us, cannot be used or not used in full. If residual stocks remain the buyer shall take over the stocks and the, if applicable incurred destruction costs in the event of a premature change to its material scheduling. This shall also apply to products, with which we had to order minimum quantities on the part of our suppliers if we have informed the customer hereof in advance.
3. The buyer guarantees that the products supplied by him for processing are suitable for this purpose. We are not obliged to examine the products supplied by the buyer for the condition and the suitability for the further processing. Within the framework of ongoing business relationships as well as if an object for processing has initially been inspected, tested and released, the buyer undertakes to inform us of each product change without request in writing. In the case of regular processing of objects the buyer is further obliged to examine the object that is to be processed by us for deviations and changes for each change to the production conditions and in his company, in particular with the exchange of tools, machines or with the introduction of new production processes and to notify us of such changes and modifications in writing.
4. We do not have to examine the instructions of our buyers, the material selection or other regulations, which are made by our buyer, for their accuracy.
5. Therefore, the buyer has to examine all instructions, which he issues as well as the quality of the materials stipulated or made available to us for the compliance with the statutory and technical regulations.
6. If the buyer is in default with regard to his obligation for provision or to provide assistance after a written warning we are entitled to the statutory rights.
7. Goods may in each case only be carried out with the explicit consent of the supplier. The return must be carried out carriage paid, by stating the order number and delivery date in the original packaging. The goods have to be in the original condition, thus in an undamaged condition. We will charge 20 % of the goods value, at least however EUR 50.00 plus the applicable rate of value added tax for the processing work relating to the return. The supplier reserves the right, against proof, to charge a higher volume of work to the orderer in an individual case; the orderer is at liberty to prove less damages.

§ 12 Place of performance and place of jurisdiction/miscellaneous

1. The place of performance and place of payment is the registered seat of our company in Sontheim/Brenz.
2. The law of the Federal Republic of Germany is to be exclusively applied to the contractual relationship. The application of the Convention of the United Nations of 11 April 1980 concerning Contracts for the International Sale of Goods (CISG „Law governing the sale of goods of Vienna") is excluded.
3. With all disputes ensuing from the contractual relationship, if the orderer is a merchant, a legal entity under public law or a special fund under public law, the action is to be filed at the court that has jurisdiction for our headquarters. We are also entitled to file action at the headquarters of the orderer.
4. We store your data according to Section23 Federal Data Protection Act.

RÖHM GmbH

89565 Sontheim (Germany)

Status: October 2015

General Service Terms (ASB) of RÖHM GmbH, Sontheim

1. Validity
1.1 These ASB form the basis for all business transactions with our customers, which refer to the repair or maintenance of the products manufactured or delivered by us insofar as these customers concern entrepreneurs within the meaning of Section 14 BGB [German Civil Code].
1.2 Contradictory, supplementary contractual terms and conditions of the customer or those which deviate from these ASB will not be recognised.
1.3 Within the framework of a regular business relationship these ASB will also be valid after the effective inclusion for the first time if we do not explicitly refer hereto in follow-up transactions.
1.4 Insofar as the ASB do not include any regulations, the General Terms of Sale and Delivery of RÖHM GmbH shall apply.

2. Offer and conclusion of the contract
2.1 Our offers are – insofar as not explicitly marked as binding – without obligation and merely to be understood as invitatio ad offerendum. The right is reserved to an interim sale.
2.2 Contracts with us will only be concluded with our written acceptance declaration or – if such is not carried out – by our delivery and service. Changes and supplementations to the contracts concluded with us require a written form.
2.3 If the object of maintenance or repair was not delivered by us then the customer has to point out existing industrial property rights with regard to the object if we are not responsible for any fault the customer shall indemnify us from possible claims of third parties from industrial property rights.
2.4 Insofar as we are responsible for negligence Par. 2.3 shall apply accordingly.

3. Contractual parts
The offer and the product list respectively available to us and the customer are a part of the contract.

4. Technical documents and plans
4.1 All rights to our offer documents as well as documents, which have been handed over, shall remain reserved.
4.2 The customer shall recognise our rights and will not reproduce the documents in full or in part, not make these accessible to third parties or use these for any other purpose than that for which they were handed over to him without our prior written authorization.

5. Scope of services, maintenance, condition of device, repair
5.1 Decisive for the scope of our delivery and service is our binding offer or – if such is not available – our written declaration of acceptance. Both individual services can be agreed, which are principally to be remunerated according to Subclause 12.1, as well as the service packages described under Subclause 5.2, which are to be remunerated according to 12.2 respectively 12.3.
5.2 The following activities are a part of our service obligation with the processing of service packages:
5.2.1 Commissioning of service
- skilled execution of the necessary commissioning of the clamping device and control at the place of installation in line with the regulations of the manufacturer.
- assembly work over the course of the commissioning together with the machine manufacturer
- first instructions and operator training
- we will invoice separate requests for the training with regard to the maintenance and use as separate work.

5.2.2 Inspection service
Skilled execution of the necessary inspection of the clamping device and control at the place of installation in line with the regulations of the manufacturer. Insofar as additional maintenance or repairs become necessary at the customer's request or owing to special loads, these are to be remunerated separately by the customer.
5.2.3 Maintenance service
Skilled execution of the necessary maintenance of the clamping device and control at the place of installation in line with the regulations of the manufacturer. Insofar as additional repairs become necessary at the customer's request or owing to special loads, these are to be remunerated separately by the customer.
5.3 The service obligation shall begin with the purchase or conclusion of a service package. With the purchase or conclusion of a service package after the expiry of the warranty period the service obligation of RÖHM shall only refer to such products, which are capable of use and free of defects at the time of the conclusion or purchase of the service package. This is to be ensured by an inspection of the products; if defects are determined these are to be remedied before the start of validity of the service package by a necessary repair liable to costs; this repair is not part of the service package.
5.4 Our service obligation shall not include carrying out work on products and accessories, which was(were) not delivered by us.
5.5 Our service obligation shall lapse if the product was not subjected to the function and safety tests according to the details in the operating instructions or third parties have carried out work on the products concerned without our prior written consent unless this work has no disadvantageous influence on the provision of our service. The same shall apply if the products have been damaged due to causes for which we are not responsible, for example by water, fire, stroke of lightning or other implications of force majeure as well as with improper treatment by the customer or third parties.
5.6 Depending on the use and type of the product an overhaul may be necessary after longer use. This is the case if the costs of a repair exceed the current value of the product. Overhaul within this meaning is also the necessary new acquisition of a product in the absence of available spare parts. Overhauls are not part of the service obligation within the service packages. If we are of the opinion that a products that is to be maintained by us under a service package requires an overhaul, we will inform the customer hereof by stating the current value estimated by us and submit an offer for the overhaul to the customer with a remuneration calculated according to 12.1.

6. Repair/service that cannot be carried out
6.1 The services provided concerning the details of a cost estimate as well as the further incurred and to be proven work (fault search time equal to working hours) will be invoiced to the customer if the repair cannot be carried out due to reasons for which RÖHM GmbH is not responsible, in particular because the fault for which a complaint will be made did not occur during the inspection, spare parts cannot be procured, the customer culpably missed the agreed date or the contract was terminated during the execution.
6.2 The object of repair only needs to be restored to the original condition again at the explicit request of the customer against reimbursement of the costs unless the undertaken work was not necessary.
6.3 In case of a repair that cannot be carried out RÖHM GmbH shall not be liable subject to sentence 2 for damages to the object of repair, the breach of contractual secondary obligations and for damages, which were not suffered to the object of repair itself, no matter to which legal grounds the customer refers. RÖHM, on the other hand, will be liable in case of wilful intent, with gross negligence of the owner / the executive bodies or executives as well as with the culpable breach of essential contractual duties. Such contractual obligations are deemed essential, the fulfilment of which makes the proper execution of the contract possible at all and the compliance with which the contractual partner may as a rule rely and depend upon.

7. Duration of the service
7.1 The details with regard to the duration of repairs and services are based upon estimates and merely serve as information and a first estimate by the customer. They are therefore not binding if they have not been explicitly marked as binding.
7.2 In case of subsequently placed additional and extension orders or with necessary additional repair work the agreed repair deadline shall be extended accordingly.

8. Obligations to provide assistance of the customer
8.1 The customer has to draw our attention to the statutory, official and company safety and other regulations applicable at the place of destination of our delivery and service, which refer to the delivery, the assembly and the operation.
8.2 The customer will inform us with or immediately after his order about possible special features of the place of installation, which may have an implication on the proper function of the products, in particular about the structural condition and the concrete operating environment.
8.3 The customer shall ensure – also during the warranty period according to Subclause 17.5 – a regular and skilled maintenance of the products delivered by us insofar as this was not taken over by us as per contract.
8.4 The customer shall dispose of the goods delivered by us at his own responsibility and at his own costs according to the respective valid regulations. We are not obliged to create a possibility for the return unless this would have been stipulated by law.
8.5 The customer has to support the repair / maintenance personnel with the execution of the repair at his own costs.
8.6 The customer has to take the special measures, which are necessary for the protection of persons and objects at the workplace. He also has to inform the repair managers about existing special safety regulations insofar as these are of significance for the repair personnel. He shall inform us in case of breaches of the repair personnel of such safety regulations. In case of serious breaches he can refuse the infringing party access to the repair location by mutual agreement with the repair manager.
8.7 The customer shall bear a supervisory and assistance obligation for the compliance with the statutory working time limits. Breaches are to be reported to RÖHM GmbH.
8.8 The customer is obliged to provide the reasonable and necessary technical assistance at his costs, in particular to:
a. Provision of the necessary, suitable assistants in the number that is necessary for the repair and for the necessary time; the assistants have to follow the instructions of the repair manager. We do not assume any liability for the assistants. If a defect or damages were caused by the assistants owing to instructions of the repair manager, then the regulations of Sections 17 and 18 shall apply accordingly.
b. Undertaking of all construction, bedding and scaffolding work including the procurement of the necessary building materials.
c. Provision of the necessary devices and heavy tools as well as the necessary commodities and required materials.
d. Provision of heating, lighting, operating power, water, including the necessary connections.
e. Provision of necessary, dry rooms, which can be locked for the storage of the tool for the repair personnel.
f. Protection of the repair place and materials against harmful influences of all kinds, cleaning of the repair place.
g. Provision of suitable, theft-proof recreation rooms and work rooms (with heating, lighting, washing possibility, sanitary facilities) and First Aid for the repair personnel.
h. Provision of the materials and undertaking of all other acts, which are necessary for the adjustment of the object of repair and for carrying out a testing that is envisaged as per contract.
8.9 The technical assistance of the orderer must guarantee that the service can be started immediately after the arrival of our personnel and carried out without delay until the acceptance by the orderer. Insofar as special plans or instructions of RÖHM are necessary, RÖHM shall make these available to the orderer in time.

9. Obligations of the customer to provide assistance in case of maintenance
9.1 The products are to be used as intended and according to their protection type and in line with the operating instructions together with their annexes.
9.2 In case of an agreement of one of the service packages described in Subclause 5, the customer will place the products that are to be installed, maintained or repaired into a faultless condition, capable of use before conclusion of the contract at his own costs if the products are not already in such a condition. If the customer does not properly satisfy this obligation either after a warning on our part and within the deadline we are entitled to accordingly cancel the contract or the delivery. Further claims for damages on our part shall remain unaffected.
9.3 If the customer uses the maintenance service interferences are to be reported to us immediately in writing, in detail and in an understandable manner.
9.4 Our employees and vicarious agents are to be granted the unimpeded and safe access to the products. In case of delays for which the customer is responsible he is obliged to remunerate the waiting times of our employees and vicarious agents resulting from the delay separately.
9.5 The customer shall refrain from commission third parties with the services during the term of a service agreement, which we have to provide according to the agreement or from performing this work himself.
9.6 The customer has to draw our attention to the statutory, official and company safety regulations and other regulations applicable at the place of destination of our delivery and service, which refer to the delivery, the assembly and the operation.

10. Inspection and acceptance
10.1 Services will be provided by us according to the guidelines of our quality control and deliveries inspected accordingly. If the customer requests further inspections then these are to be agreed in writing and paid by the customer. This shall relate e.g. to special tests for the acceptance.

General Service Terms (ASB) of RÖHM GmbH, Sontheim

10.2 The customer undertakes to accept our services under this contract immediately after the report that they have been completed. Upon request he has to declare their acceptance in writing towards our employees or vicarious agents insofar as there is no essential defect. This is carried out by the signing of the service report.
10.3 Our services shall be deemed as accepted free of defects with the re-commencement of the operational use of the maintained or repaired product, in particular for production purposes, if no defects have been previously reported by the customer.

11. Cost details and cost estimate
11.1 The creation of the cost estimates is liable to costs if the execution of the repair is not approved.
11.2. The costs for a cost estimate amount to the flat rates fixed in the current price list.
11.3 If the repair cannot be carried out at these costs or if our employees or vicarious agents consider the execution of additional work to be necessary during the repair the customer's consent is to be obtained if the stated costs are exceeded by more than 15%.

12. Remuneration, maturity and terms of payment
12.1 Insofar as not otherwise agreed and there is no warranty case our services are to be remunerated according to the actual work requirement pursuant to our respectively valid general price lists. The time required by our employees will be settled in time sections of 15 min. In addition to the time required for the work that is to be performed in these cases the customer will pay the travelling and waiting times, overtime surcharges, expenses, travelling and accommodation costs as well as the costs of spare parts, materials subject to wear and tear and consumables and replacement part sets according to our prices lists or in line with the offer.
12.2 Insofar as a flat rate remuneration was agreed for a service package, our work and travelling costs and expenses are thus covered, not however the costs for waiting times, overtime at the customer's request, spare parts, materials subject to wear and tear and consumables, replacement parts sets as well as other accessories. Our work for if applicable necessary repairs is to be remunerated separately by the customer according to Subclause 12.1.
12.3 The prices for our services can be derived from the respective price list valid upon conclusion of the contract and are deemed ex works plus value added tax. The calculation basis for the remuneration is the one-shift operation, i.e. a use of the products up to 160 hours in a calendar month. A surcharge to the list price of 50% is charged for the two-shift operation, a surcharge of 100% for the three-shift operation. The above two rates shall only apply to the service packages described under Subclause 5.. If the customer requests assignments outside of our normal working hours (Mo - Fr, 6:30 am - 6:30 pm, a max. of 7 h per day) surcharges will be calculated according to the respective valid price list.
12.4 If our personnel and material costs are increased then we are entitled to adjust the contractual prices after the expiry of the first year up to a maximum of 5% above the price of the previous year. Price changes will be announced to the customer at least one month before the new contractual prices come into force. The customer is entitled to terminate the contract effective as of the time at which the new price would become valid for him for the first time.

13. Transport and insurance with the repair in the plant of RÖHM GmbH
13.1 The object for repair will be delivered by the customer to us at his costs together with the repair and service form and after execution of the repair collected by the customer again or return to him at the customer's costs.
13.2 The customer shall bear the risk of transport.
13.3 At the customer's request a shipment carried out by us will be insured at the customer's costs against the insurable transport risks, e.g. theft, breakage and fire.
13.4 No insurance cover exists during the repair time in our plant. The customer has to ensure the maintenance of the existing insurance cover for the object of repair e.g. with regard to fire, pipe water, storm and machine breakage insurance. Insurance cover can only be procured for these risks at the explicit wish and costs of the customer.
13.5 In case of delay of the customer with the take-over we can charge a storage fee for the storage in our plant. The object of repair can also be stored otherwise at our discretion. The costs and risk of the storage during the delay shall be for the expense of the customer.

14. Repair deadline
14.1. The details concerning the repair deadlines are based on estimates and merely serve for the purpose of information and first orientation. They are therefore not binding unless this is explicitly agreed.
14.2. The agreement of a binding repair deadline, which must be described as binding, can only be requested by the customer if the scope of the work has been precisely determined.
14.3. The binding repair deadline will have been adhered to if by the time that it expires the object of repair is ready for take-over by the customer, in the event of a contractually envisaged testing ready for its execution.
14.4. In case of subsequently placed additional and extension orders or with necessary additional repair work the agreed repair deadline will be extended accordingly.
14.5. If the repair is delayed due to measures within the scope of industrial disputes, in particular strike and lock-out as well as the occurrence of circumstances, which were not caused by us, a reasonable extension to the repair deadline will occur insofar as such impediments have as proven a substantial influence on the completion of the repair; this shall also apply if such circumstances occur after we are in default.

15. Ban on offsetting and assignment; subcontractors
15.1 The customer is only entitled to offsetting in the event of undisputed claims or claims which have been declared final and binding. This shall not apply if the customer asserts claims in the reciprocal relationship, in particular claims for defects.
15.2 The assignment of rights of the customer from contractual relationships with us presumes our prior consent in order to be valid. This shall not apply insofar as Section 354 a HGB [German Commercial Code] applies.
15.3 We are entitled to use third parties in order to fulfil our contractual obligations.

16. Reservation of title
16.1 The goods delivered by us shall remain our property until the payment of all of our claims against the customer, no matter for what legal grounds, also future ones. In case of current account the afore-mentioned property shall be deemed as security for our balance claim.
16.2 The customer may only sell within the framework of his customary business transactions and neither pledge, nor assign the goods as collateral. The customer hereby assigns us for security of our payment claims against him, in the amount of the value of our delivery and service, all claims with all secondary rights, which he acquires against his buyer owing to such a sale.
16.3 As long as the property has not yet been assigned, the customer has to inform us immediately in writing if the delivered object is attached or is exposed to other interventions of third parties. Insofar as the third party is not in the position to reimburse us the court and out-of-court costs of an action according to Section 771 ZPO [German Code of Civil Procedure] the customer shall be liable for the loss incurred to us.
16.4. We undertake to release the securities to which we are entitled at the customer's request insofar as their value exceeds the claims which are to be secured by more than 20 %."

17. Warranty
17.1 Insofar as the creation of a work has been agreed and thus the law governing contracts for work and services applies the following shall apply: If our services are faulty then we are first of all entitled and obliged to subsequent satisfaction according to Section 634 No. 1 BGB. If the subsequent satisfaction finally fails the customer can according to Section 634 No. 3 cancel the contract or reduce the remuneration and according to Section 634 No. 4 BGB request damages. Claims of the customer for reimbursement of expenses according to Section 634 No. 2 BGB (self-execution) are excluded. Subclause 18 shall apply to claims for damages.
17.2 Insofar as we provide planning services without executing these and thus the law governing service contracts applies (e.g. in the event of a breach of our duties under Subclauses 5.2.1, 5.2.2 and 5.2.3) the following applies: If our services are faulty then we are first of all entitled and obliged to subsequent improvement. If the subsequent improvement finally fails the customer is entitled to damages according to Subclause 18.
17.3 Excluded from the warranty are damages as a result of natural wear and tear, faulty maintenance – insofar as we have not carried out this maintenance as per contract, failure to comply with operating equipment regulations, excessive use, unsuitable operating equipment, chemical or electrolytic influences, faulty construction and assembly work of third parties as well as other causes, for which we are not responsible.
17.4 The warranty shall lapse if the customer or third party makes changes or repairs to our services /products without our prior written consent unless the defect is not a result thereof.
17.5 Claims of the customer owing to defects of quality and title shall become statute-barred with the expiry of 12 months after the acceptance of the work or the knowledge of defects with the provision of planning services.

18. Liability
18.1 We shall be liable to an unlimited extent in case of wilful intent and gross negligence as well as with the injury to life, the body and the health as well as with the culpable breach of essential contractual obligations. Deemed as essential are such contractual obligations, the fulfilment of which makes the proper execution of the contract possible at all and the compliance with which the contractual partner may as a rule rely and depend on.
18.3 Incidentally our liability is excluded.
18.4 A liability according to the Product Liability Act remains unaffected.
18.5 The personal liability of our legal representatives and vicarious agents is limited as our own liability according to the afore-mentioned provisions.

19. Term of the contract; termination
19.1 Service agreements according to Subclause 5. shall come into force when signed by both parties and shall initially apply until the end of the calendar year, that follows the year in which the contract was concluded. The contractual relationship will subsequently be extended respectively by one further year unless it is terminated by one of the parties with a period of notice of 3 months to the end of the second or a following year. Contractual relationships can be terminated on the whole or only with regard to individual products.
19.2 The right to the extraordinary termination for an important reason remains unaffected.

20. Place of jurisdiction; applicable law
20.1 With all disputes ensuing from the contractual relationship if the orderer is a merchant, a legal entity under public law or a special fund under public law, the action is to be filed at the court that has jurisdiction for our headquarters. We are also entitled to file an action at the headquarters of the orderer.
20.2 The legal relationship is subject to the law of the Federal Republic of Germany. German international private law and the Viennese Convention of the United Nations concerning Contracts for the International Sale of Goods (CISG) will not apply.

RÖHM GmbH

89565 Sontheim (Germany)

Status: October 2015

RÖHM GmbH
Heinrich-Röhm-Straße 50
89567 Sontheim/Brenz
Germany
Tel +49 7325 16 0
Fax +49 7325 16 510
info@roehm.biz
www.roehm.biz

driven by technology

Id.-Nr. 1242320 / 1118 AU