Akkermans Industrial Engineering B.V. info@aiebv.com T +31 (0)165 - 224140

NEW

CAPTIS CLAMPING SYSTEM

The modular and flexible system

RÖHM
driven by technology

CAPTIS CLAMPING SYSTEM

The new. modularly designed CAPTIS clamping system impresses with its high level of flexibility and compact design for an enlarged working space. The extensive clamping of CAPTIS collets in proven RÖHM quality is characterized by high concentricity and repeatability of up to 0.01 mm and excellent force distribution.

CAPTIS COLLET CHUCK. ROTATING

For use on lathes.
Power operated.

- Modular construction for maximum flexibility
- Compact design for more work space within the machine
- Various combination and retooling possibilities

CAPTIS-D
With axial pull and with through-hole. Shortest design. Convertible to CAPTIS-A. Prepared for workpiece front end-stop.
- Ideal for rod and tube processing

CAPTIS-A
With axial pull. Pulldown effect at the stop. Convertible to CAPTIS-D. Prepared for workpiece endstop and front end-stop.
- Ideal for flange-like workpieces and for clamping against the workpiece stop

CAPTIS-AF
With axial fixed collet. Prepared for workpiece endstop or front end-stop.
- Ideal for delicate workpieces, short clamping lengths and for use in opposed spindles or counter spindles

CAPTIS-M COLLET CHUCK, ROTATING & STATIONARY

Suitable for both rotating use in lathes as well as for stationary use in drilling, milling and machining centers; measuring machines; and conventional and manual processing. Operated manually with a security key.

- Compact design with reduced interfering contours for optimum workpiece accessibility and enlarged working space
- Modular conversion option for internal and external workpiece stop
- Stable clamping using axial tension

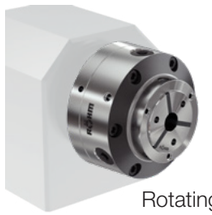

Rotating use

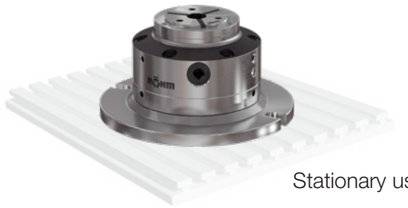

Stationary use

NEW

Akkermans Industrial Engineering B.V. info@aiebv.com T +31 (0)165 - 224140

CAPTIS SYSTEM COMPONENTS

SYSTEM COMPONENTS

The design as a consistently modular system makes it possible to combine individual components such as the CAPTIS collet chuck and the CAPTIS collet.

NEW

The new family member CAPTIS-M is also compatible with the CAPTIS collet.

CAPTIS COLLET

- Clamping range ± 0,5 mm
- Hardened and ground steel segments for high wear resistance

Different designs for clamping of machined and unmachined parts available.

CHANGING DEVICE

The quick and easy collet change within 15 seconds reduces set-up times.

CAPTIS-D COLLET CHUCK

WITH AXIAL PULL AND THROUGH-HOLE

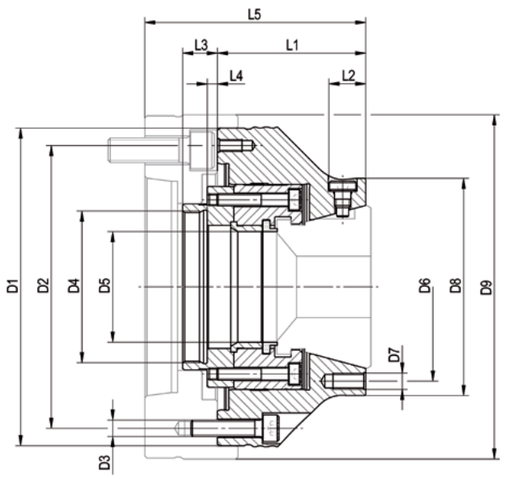

CAPTIS-D collet chucks - with axial pull

Size	32	42	52	65	80	100	120
Collet chucks	**1283101**	**1283102**	**1283103**	**1283104**	**1283105 ▲**	**1283106 ▲**	**1283107 ▲**
D1 mm	137	137	155	155	215	215	250
D2 mm	100	118	138	138	190	190	215
D3	6x M8	6x M8	6x M8	6x M8	6x M12	6x M12	6x M12
D4	M54x1.5	M54x1.5	M74x1.5	M74x1.5	M94x1.5	M120x1.5	M132x1.5
D5	34	44	54	68	82	102	122
D6	70	92	92	110	132	190	225
D7	3x M8	3x M8	3x M8	3x M8	3x M10	3x M12	3x M12
D8	84	106	106	122	152	215	250
L1 mm	70.5	69	72.5	78	85	102	102
L2 mm	18	18	18	26	19	-	-
L3 mm	17	17	17	17	20	20	20
L4 min mm	1.5	1.5	1.5	1.5	-0.5	-0.5	-0.5
L4 max mm	7.5	7.5	7.5	7.5	5.5	5.5	5.5
Total stroke mm	6	6	6	6	6	6	6
Maximum draw bar pull kN	25	35	40	45	50	65	70
Total clamping force kN	60	70	80	90	100	130	140
Speed max, min^{-1}	8000	7000	6500	6000	5500	5000	4000
Chucking capacity mm	4-32	4-42	4-52	4-65	5-80	42-100	62-120
Clamping device manual	**1283285**	**1283286**	**1283287**	**1283288**	**1283289**	**-**	**-**
Clamping device pneumatic	**-**	**-**	**-**	**-**	**1362635**	**1362636**	**1362637**
Conversion kit to CAPTIS-A	**1283256**	**1283257**	**1283258**	**1283259**	**1283260 ▲**	**1283261 ▲**	**1283262 ▲**
Turning fixture for soft collets	**1316901**	**1316902**	**1316903**	**1316904**	**1316905**	**1316906**	**1316907**

▲ on request

Akkermans Industrial Engineering B.V. info@aiebv.com T +31 (0)165 - 224140

CAPTIS-A COLLET CHUCKS

WITH AXIAL PULL, PREPARED FOR WORKPIECE STOP

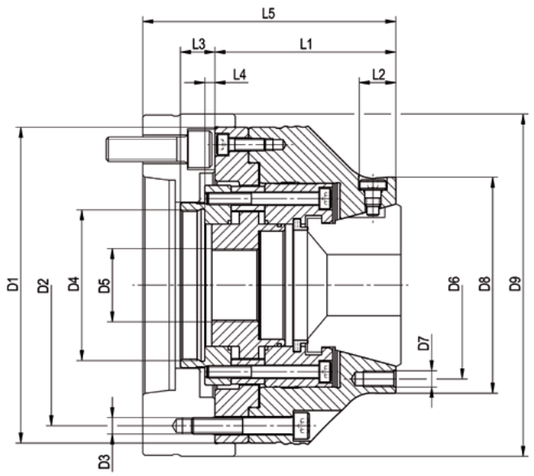

CAPTIS-A Collet chucks - with axial tension against workpiece stop

Size	32	42	52	65	80	100	120
Collet chucks	**1283108**	**1283109**	**1283110**	**1283111**	**1283112 ▲**	**1283113 ▲**	**1283114 ▲**
D1 mm	137	137	155	155	215	215	250
D2 mm	100	118	138	138	190	190	225
D3	6x M8	6x M8	6x M8	6x M8	6x M12	6x M12	6x M12
D4	M54x1.5	M54x1.5	M74x1.5	M74x1.5	M94x1.5	M120x1.5	M132x1.5
D5	M22x1.5	M30x1.5	M36x1.5	M50x1.5	M55x1.5	M85x1.5	M105x1.5
D6	70	92	92	110	132	190	225
D7	3x M8	3x M8	3x M8	3x M8	3x M10	3xM12	3x M12
D8	84	106	106	122	152	215	250
L1 mm	84	82.5	89	94.5	103	122	122
L2 mm	18	18	18	26	19	-	-
L3 mm	17	17	17	17	20	20	20
L4 min mm	1.5	1.5	1.5	1.5	-0.5	-0.5	-0.5
L4 max mm	7.5	7.5	7.5	7.5	5.5	5.5	5.5
Total stroke mm	6	6	6	6	6	6	6
Maximum draw bar pull kN	25	35	40	45	50	65	70
Total clamping force kN	60	70	80	90	100	130	140
Speed max, min^{-1}	8000	7000	6500	6000	5500	5000	4000
Chucking capacity mm	4-32	4-42	4-52	4-65	5-80	42-100	62-120
Clamping device manual	**1283285**	**1283286**	**1283287**	**1283288**	**1283289**	**-**	**-**
Clamping device pneumatic	**-**	**-**	**-**	**-**	**1362635**	**1362636**	**1362637**
Conversion kit to CAPTIS-D	**1283249**	**1283250**	**1283251**	**1283252**	**1283253 ▲**	**1283254 ▲**	**1283255 ▲**
Turning fixture for soft collets	**1316901**	**1316902**	**1316903**	**1316904**	**1316905**	**1316906**	**1316907**

▲ on request

CAPTIS-AF COLLET CHUCKS

WITH AXIALLY FIXED COLLET, PREPARED FOR WORKPIECE STOP

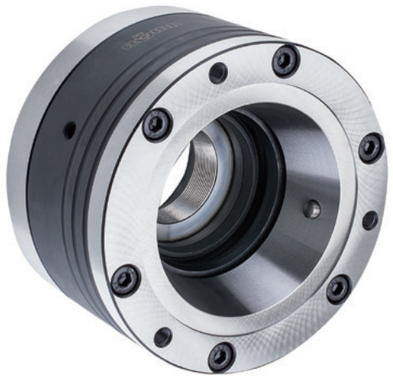

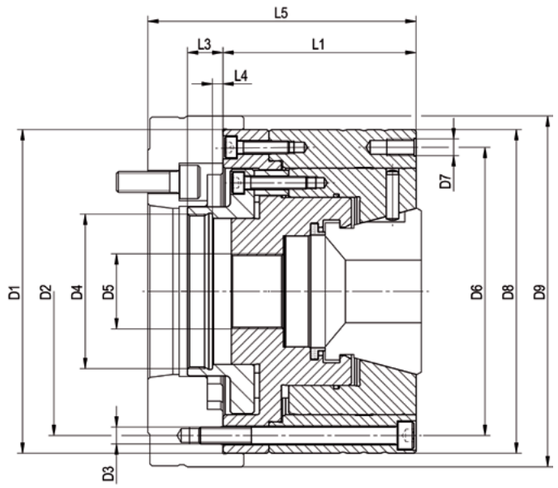

CAPTIS-AF Collet chucks - axially fixed collet chuck, no axial tension against internal workpiece stop

Size	32	42	52	65	80	100	120
Collet chucks	**1285001**	**1285002**	**1285003**	**1285004**	**1285005 ▲**	**1285006 ▲**	**1285007 ▲**
D1 mm	137	137	155	155	215	215	250
D2 mm	120	120	138	138	190	190	225
D3	6x M8	6x M8	6x M8	6x M8	6x M12	6x M12	6x M12
D4	M48x1.5	M54x1.5	M74x1.5	M74x1.5	M120x1.5	M120x1.5	M132x1.5
D5	M22x1.5	M30x1.5	M36x1.5	M50x1.5	M65x1.5	M85x1.5	M105x1.5
D6	94	120	138	138	190	190	225
D7	3x M6	3x M8	3x M8	3x M8	3x M8	3x M8	3x M8
D8	105	137	155	155	215	215	250
L1 mm	80.5	81	92.5	92.5	102	102	122
L2 mm	34.7	-	-	-	-	-	-
L3 mm	15.5	16	17	17	18.5	18.5	18.5
L4 min mm	-4	-2.5	2.5	2.5	-1	-1	-1
L4 max mm	2	3.5	8.5	8.5	5	5	5
Total stroke mm	6	6	6	6	6	6	6
Maximum draw bar pull kN	25	35	40	45	50	65	70
Total clamping force kN	60	70	80	90	100	130	140
Speed max, min^{-1}	8000	7000	6500	6000	5500	5000	4000
Chucking capacity mm	4-32	4-42	4-52	4-65	5-80	42-100	62-120
Clamping device manual	**1283285**	**1283286**	**1283287**	**1283288**	**1283289**	**-**	**-**
Clamping device pneumatic	**-**	**-**	**-**	**-**	**1362635**	**1362636**	**1362637**
Turning fixture for soft collets	**1316901**	**1316902**	**1316903**	**1316904**	**1316905**	**1316906**	**1316907**

▲ on request

Akkermans Industrial Engineering B.V. info@aiebv.com T +31 (0)165 - 224140

CAPTIS INTERMEDIATE FLANGE

FOR CAPTIS-D, CAPTIS-A, CAPTIS-AF

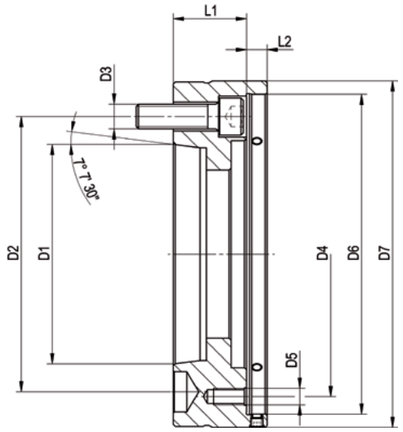

Intermediate flange ISO 702-1 (DIN 55028) **with adjusting screw**

Size	32/42 - Nr.5	32/42 - Nr.6	52/65 - Nr.5	52/65 - Nr.6	52/65 - Nr.8	80/100 - Nr.6	80/100 - Nr.8	120 - Nr.8	120 - Nr.11
Intermediate flange	**1283194**	**1283195**	**1283198**	**1283199**	**1283200**	**1283203 ▲**	**1283204 ▲**	**1283207 ▲**	**1283209 ▲**
D1 mm	82.563	106.375	82.563	106.375	139.719	106.375	139.719	139.719	196.869
D2 mm	104.8	133.4	104.8	133.4	171.4	133.4	171.4	171.4	235
D3	6x M10	3x M12	6x M10	3x M12	3x M16	6x M12	3x M16	6x M16	3x M20
D4 mm	100/120	100/120	138	138	138	190	190	225	225
D5	6x M8	6x M8	6x M8	6x M8	6x M8	6x M12	6x M12	6x M12	6x M12
D6	137	137	155	155	155	215	215	250	250
D7 mm	150	165	168	168	210	230	230	270	280
L1 mm	34.5	35.5	36	35.5	42	47	40	55	40
L2 mm	10	10	10	10	10	10	10	12	12

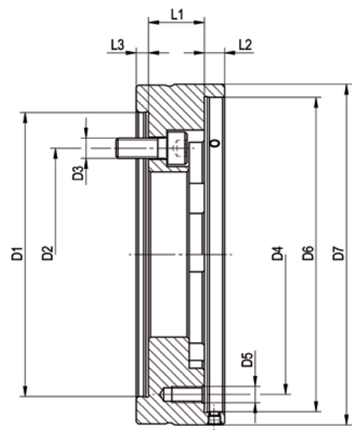

Intermediate flange cylindrical centre mount **with adjusting screw**

Size	32/42-Z140	52/65-Z140	52/65-Z170	80/100-Z170	80/100-Z220	120-Z220
Intermediate flange	**1283196**	**1283201**	**1283202**	**1283205 ▲**	**1283206 ▲**	**1283208 ▲**
D1 mm	140	140	170	170	220	220
D2 mm	104.8	104.8	133.4	133.4	171.4	171.4
D3	6x M10	6x M10	6x M12	6x M12	6x M16	6x M16
D4 mm	100/120	138	138	190	190	225
D5	6x M8	6x M8	6x M8	6x M12	6x M12	6x M12
D6	137	155	155	215	215	250
D7 mm	150	168	180	230	230	270
L1 mm	19.5	27.5	22.5	47	40	55
L2 mm	10	10	10	10	10	12
L3 mm	6	6	6	6	6	6

▲ on request

NEW

BENEFITS AT A GLANCE

GREATEST FLEXIBILITY

- Numerous combination options thanks to the modular system

COMPACT AND MODULAR CONSTRUCTION

- Compact design with reduced interfering contours for optimum workpiece accessibility and enlarged working space
- Modular extension option

SENSITIVE & DEFORMATION-FREE CLAMPING

- Precise concentricity and repeatability of < 0.01 mm possible
- Uniform force distribution by enclosing clamping
- Stable clamping using axial tension

FLEXIBLE APPLICATIONS

The CAPTIS-M collet chuck operated manually with a security key is ideally suited for rotating use in lathes as well as for stationary use in drilling, milling and machining centers, measuring machines as well as for conventional and manual processing.

ROTATING USE

STATIONARY USE

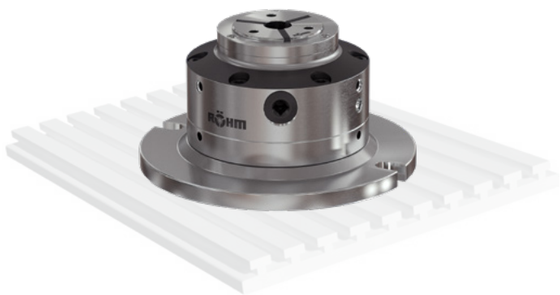

Akkermans Industrial Engineering B.V. info@aiebv.com T +31 (0)165 - 224140

NEW

CAPTIS-M COLLET CHUCKS

WITH AXIAL TENSION

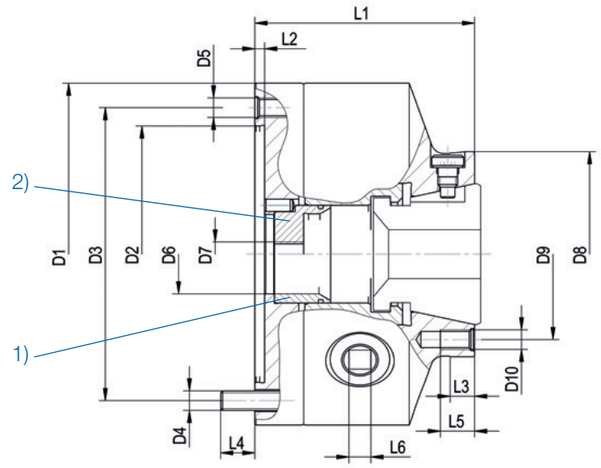

CAPTIS-M Collet chucks - with axial tension against workpiece stop

Size	32	42	52	65
Collet chucks (incl. workpiece stop, protecting sleeve and security key)	**1345739**	**1345740**	**1345741**	**1345742 ▲**
D1 mm	140	160	160	200
D2 mm	105	125	125	160
D3 mm [H6]	120	140	140	176
D4	6xM8	6xM10	6xM10	6xM10
D5	3xM8	3xM10	3xM10	3xM10
D6 mm	32.5	42.5	52.5	65.5
D7	M10	M10	M10	M10
D8 mm [g6]	84	106	106	122
D9 mm	70	92	92	110
D10	3xM8	3xM8	3xM8	3xM8
L1 mm	90	100	100	110
L2 mm	4	4	4	4
L3 mm	10	10	10	10
L4 mm	13	14	14	16
L5 mm	14	16	16	16
L6 mm	9	10	10	11
Total stroke mm	6	6	6	6
Expansion collet mm	2.1	2.6	2.6	2.6
Max. tightening torque	60	120	120	120
Total clamping force kN	30	60	60	50
Speed max, min^{-1}	5000	4500	4500	4000
Chucking capacity mm	4-32	4-42	4-52	4-65
Protecting sleeve 1)	**1345751**	**1345760**	**1345768**	**1345777**
Workpiece stop 2)	**1345749**	**1345758**	**1345766**	**1345775**
Clamping device manual	**1283285**	**1283286**	**1283287**	**1283288**
Clamping device pneumatic	**-**	**-**	**-**	**-**
Key (only for chucks with stationary use)	**107428**	**107429**	**107429**	**107430**
Security key (acc, to DIN 1550 for rotating chucks)	**154372**	**154373**	**154373**	**154374**
Turning fixture for soft collets	**1316901**	**1316902**	**1316903**	**1316904**

Manual changing device

Security key

▲ on request

NEW

INTERMEDIATE FLANGE

SUITABLE FOR CAPTIS-M AND LATHE CHUCKS

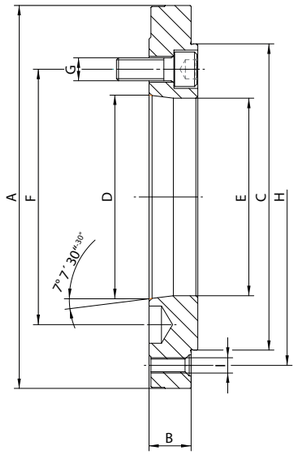

A09
Steel Intermediate flange according to **DIN ISO 702-1** (DIN 55026) / Steel Intermediate flange according to DIN 6350

Size	32	32	32	42/52	42/52	42/52	42/52	65/80	65/80	65/80
Short taper size	**Gr. 4**	**Gr. 5**	**Gr. 6**	**Gr. 4**	**Gr. 5**	**Gr. 6**	**Gr. 8**	**Gr. 5**	**Gr. 6**	**Gr. 8**
Intermediate flange	**182902 ▲**	**182904 ▲**	**182906 ▲**	**182908 ▲**	**182910 ▲**	**182912 ▲**	**182914 ▲**	**182918 ▲**	**182920 ▲**	**182922 ▲**
A mm	140	140	165	160	160	165	210	200	200	210
B mm	21	21	25	18	18	25	32	18	22	32
C mm	95	95	95	125	125	125	125	160	160	160
D mm	63.513	82.563	106.375	63.513	82.563	106.375	139.719	82.563	106.375	139.719
E mm	61	79.6	80	61	79.6	103.2	100	79.6	103.2	136.2
F mm	82.6	104.8	133.4	82.6	104.8	133.4	171.4	104.8	133.4	171.4
G	M10	M10	M12	M10	M10	M12	M16	M10	M12	M16
H mm	108 (120)	108 (120)	108 (120)	140	140	140	140	176	176	176
I	3x/6xM8	3x/6xM8	6xM8	6xM10	6xM10	6xM10	6xM10	6xM10	6xM10	6xM10

Complete with fastening screws

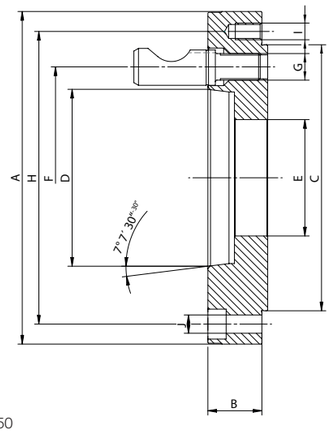

A09
Steel Intermediate flange according to **DIN ISO 702-2** (DIN 55029) / Steel Intermediate flange according to DIN 6350

Size	32	32	32	42/52	42/52	42/52	42/52	65/80	65/80	65/80
Short taper size	**Gr. 4**	**Gr. 5**	**Gr. 6**	**Gr. 4**	**Gr. 5**	**Gr. 6**	**Gr. 8**	**Gr. 5**	**Gr. 6**	**Gr. 8**
Intermediate flange	**182958 ▲**	**182960 ▲**	**182962 ▲**	**182966 ▲**	**182968 ▲**	**182970 ▲**	**182972 ▲**	**182976 ▲**	**182978 ▲**	**182980 ▲**
A mm	140	146	181	160	160	181	225	200	200	225
B mm	24	30	36	23.5	26.5	35.5	38.5	26.50	32.50	39.50
C mm	95	95	95	125	125	125	125	160	160	160
D mm	63.513	82.563	106.375	63.513	82.563	106.375	139.719	82.563	106.375	139.719
E mm	33	33	33	50	50	50	50	70	70	70
F mm	82.6	104.8	133.4	82.6	104.8	133.4	171.4	104.8	133.4	171.4
G	M10x1	M12x1	M16x1.5	M10x1	M12x1	M16x1.5	M20x1.5	M12x1	M16x1.5	M20x1.5
H mm	108 (120)	108 (120)	108 (120)	140	140	140	140	176	176	176
I	6xM8	6xM8	6xM8	6xM10	6xM10	6xM10	6xM10	6xM10	6xM10	6xM10
J mm	3x9	-	-	3x11	3x11	-	-	3x11	3x11	-

Complete with cam locking bolts

▲ on request

Akkermans Industrial Engineering B.V. info@aiebv.com T +31 (0)165 - 224140

NEW

INTERMEDIATE FLANGE

SUITABLE FOR CAPTIS-M AND LATHE CHUCKS

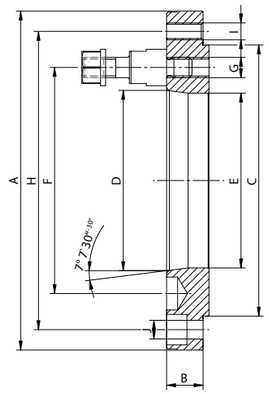

A09
Steel Intermediate flange according to **DIN ISO 702-3** (DIN 55027) / Steel Intermediate flange according to DIN 6350

Size	32	32	32	42/52	42/52	42/52	42/52	65/80	65/80	65/80
Short taper size	**Gr. 4**	**Gr. 5**	**Gr. 6**	**Gr. 4**	**Gr. 5**	**Gr. 6**	**Gr. 8**	**Gr. 5**	**Gr. 6**	**Gr. 8**
Intermediate flange	**183014 ▲**	**183016 ▲**	**183018 ▲**	**183022 ▲**	**183024 ▲**	**183026 ▲**	**183028 ▲**	**183032 ▲**	**183034 ▲**	**183036 ▲**
A mm	140	140	170	160	160	170	220	200	200	220
B mm	16.5	16.5	27	21.5	21.5	18	31.5	21.5	21.5	21.5
C mm	95	95	95	125	125	125	125	160	160	160
D mm	63.513	82.563	106.375	63.513	82.563	106.375	139.719	82.563	106.375	139.719
E mm	61	79.6	80	61	79.6	103.2	100	79.6	103.2	136.2
F mm	85	104.8	133.4	85	104.8	133.4	171.4	104.8	133.4	171.4
G	M10	M10	M12	M10	M10	M12	M16	M10	M12	M16
H mm	108 (120)	108 (120)	108 (120)	140	140	140	140	176	176	176
I	6xM8	6xM8	6xM8	6xM10	6xM10	6xM10	6xM10	6xM10	6xM10	6xM10
J mm	3x9	-	-	3x11	3x11	-	-	3x11	3x11	3x11

Complete with studs and collar nuts

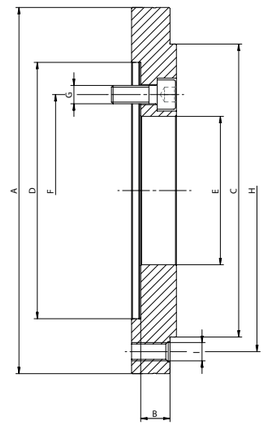

A09
Steel Intermediate flange according to **DIN ISO 702-4** (DIN 55028) / Steel Intermediate flange according to DIN 6350

Size	32	32	32	42/52	42/52	42/52	42/52	65/80	65/80
Flansch	**Gr. 3**	**Gr. 4**	**Gr. 5**	**Gr. 3**	**Gr. 4**	**Gr. 5**	**Gr. 6**	**Gr. 5**	**Gr. 6**
Cylindrical mount	**90**	**115**	**140**	**90**	**115**	**140**	**170**	**140**	**170**
Intermediate flange	**1349459 ▲**	**1349461 ▲**	**1349463 ▲**	**1349465 ▲**	**1349467 ▲**	**1349469 ▲**	**1349471 ▲**	**1349473 ▲**	**1349475 ▲**
A mm	140	140	150	160	160	160	180	200	200
B mm	13	20	18	13	13	15	20	16	18
C mm	95	95	95	125	125	125	125	160	160
D mm	90 + 0.022/0	115 + 0.022/0	140 + 0.025/0	90 + 0.022/0	115 + 0.022/0	140 + 0.025/0	170 + 0.025/0	140 + 0.025/0	170 + 0.025/0
E mm	43	53	81	43	53	81	81	81	81
F mm	70.6	82.6	104.8	70.6	82.6	104.8	133.4	104.8	133.4
G mm	3xM10	3xM10	3xM10	6xM10	6xM10	6xM10	3xM12	6xM10	6xM12
H mm	120	120	120	140	140	140	140	176	176
I	6xM8	6xM8	6xM8	6xM10	6xM10	6xM10	6xM10	6xM10	6xM10

Complete with fastening screws

▲ on request

NEW

BASE PLATE

SUITABLE FOR CAPTIS-M AND LATHE CHUCKS

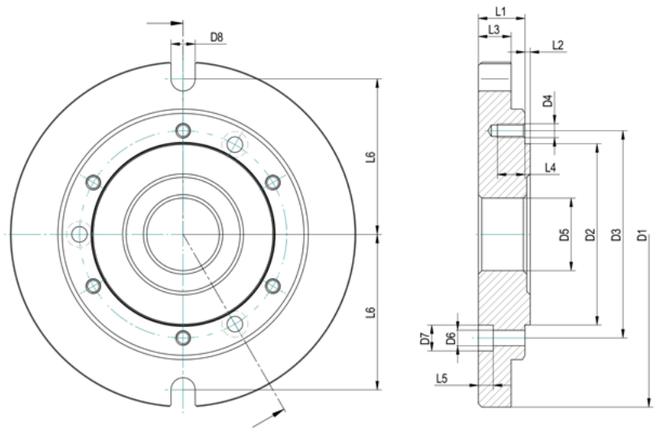

A09
Base plates for CAPTIS-M and lathe chucks with **cylindrical centre mount,** DIN 6350

Size	32	42/52	65/80
Base plates	**1352890**	**162793**	**162401**
D1 mm	220	240	280
D2 mm	105	125	160
D3 mm	120	140	176
D4	6xM8	6xM10	6xM10
D5 mm	40	42	55
D6 mm	14	14	14
D7 mm	28	28	28
D8 mm	3x9	3x11	3x11
D9 mm	3x15	3x18	3x18
D10	190	212	252
L1 mm	27	27	27
L2 mm	3	3	3
L3 mm	16	16	16
L4 mm	14	17	17
L5	10	11	11

STATIONARY USE WITH BASE PLATE

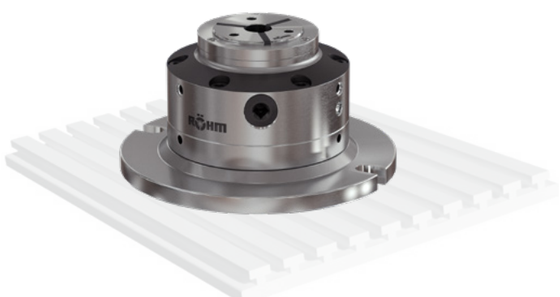

Akkermans Industrial Engineering B.V. info@aiebv.com T +31 (0)165 - 224140

COLLET

SUITABLE FOR ALL CAPTIS CLAMPING SYSTEMS

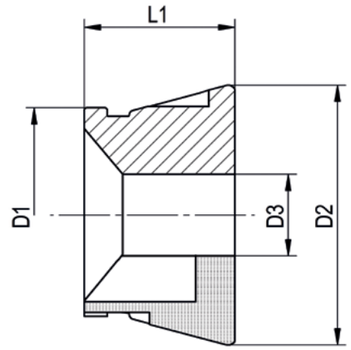

Clamping of unmachined parts with extension

Size	D1	D2	L1	LQ	Q	G	W	Round	Hexagon	Square	Raising	Order No.
32	46.2	57.7	47	X				8-32mm			1	CAPTIS-32-47-RLQ / D3*
32 ▲	46.2	57.7	47		X				7-27mm		1	CAPTIS-32-47-SQ / D3*
32 ▲	46.2	57.7	47		X					7-22mm	1	CAPTIS-32-47-VQ / D3*

Clamping of machined parts without extension

Size	D1	D2	L1	LQ	Q	G	W	Round	Hexagon	Square	Raising	Order No.
32	46.2	57.7	44			X		4-32mm			1	CAPTIS-32-44-RG / D3*
32 ▲	46.2	57.7	44				X	5.15.20mm			1	CAPTIS-32-44-WG / D3*

Clamping of unmachined parts with extension

Size	D1	D2	L1	LQ	Q	G	W	Round	Hexagon	Square	Raising	Order No.
42	54	79.5	47	X				8-42mm			0.5	CAPTIS-42-47-RLQ / D3*
42 ▲	54	79.5	47		X				7-36mm		1	CAPTIS-42-47-SQ / D3*
42 ▲	54	79.5	47		X					7-30mm	1	CAPTIS-42-47-VQ / D3*

Clamping of machined parts without extension

Size	D1	D2	L1	LQ	Q	G	W	Round	Hexagon	Square	Raising	Order No.
42	54	79.5	42			X		4-42mm			0.5	CAPTIS-42-42-RG / D3*
42 ▲	54	79.5	42				X	8.15.30mm			0.5	CAPTIS-42-42-WG / D3*

Clamping of unmachined parts with extension

Size	D1	D2	L1	LQ	Q	G	W	Round	Hexagon	Square	Raising	Order No.
52	65.7	79.5	46	X				8-52mm			0.5	CAPTIS-52-46-RLQ / D3*
52 ▲	65.7	79.5	46		X				7-45mm		1	CAPTIS-52-46-SQ / D3*
52 ▲	65.7	79.5	46		X					8-36mm	1	CAPTIS-52-46-VQ / D3*

Clamping of machined parts without extension

Size	D1	D2	L1	LQ	Q	G	W	Round	Hexagon	Square	Raising	Order No.
52	65.7	79.5	46			X		4-52mm			0.5	CAPTIS-52-46-RG / D3*
52 ▲	65.7	79.5	46				X	8.15.30mm			0.5	CAPTIS-52-46-WG / D3*

(G): Smooth — from 4-7 mm smooth
(LQ): Longitudinal and transverse groovesrillen — from 8-10 mm with trans. grooves
(Q): Transverse grooves — caused by production
(W): Soft
* Please specify clamping diameters D3 in the order, valid for collet chucks type LQ + Q

COLLET

SUITABLE FOR ALL CAPTIS CLAMPING SYSTEMS

Clamping of unmachined parts with extension

Size	D1	D2	L1	LQ	Q	G	W	Round	Hexagon	Square	Raising	Order No.
65	80	99.5	58	X				8-65mm			0.5	CAPTIS-65-58-RLQ / D3*
65 ▲	80	99.5	58		X				7-56mm		1	CAPTIS-65-58-SQ / D3*
65 ▲	80	99.5	58		X					7-46mm	1	CAPTIS-65-58-VQ / D3*

Clamping of machined parts without extension

Size	D1	D2	L1	LQ	Q	G	W	Round	Hexagon	Square	Raising	Order No.
65	80	99.5	53			X		5-65mm			0.5	CAPTIS-65-53-RG / D3*
65 ▲	80	99.5	53				X	8.20.40mm			0.5	CAPTIS-65-53-WG / D3*

Clamping of unmachined parts with extension

Size	D1	D2	L1	LQ	Q	G	W	Round	Hexagon	Square	Raising	Order No.
80 ▲	94.5	114.5	53	X				11-80mm			1	CAPTIS-80-53-RLQ / D3*
80 ▲	94.5	114.5	53		X				8-68mm		1	CAPTIS-80-53-SQ / D3*
80 ▲	94.5	114.5	53		X					8-56mm	1	CAPTIS-80-53-VQ / D3*

Clamping of machined parts without extension

Size	D1	D2	L1	LQ	Q	G	W	Round	Hexagon	Square	Raising	Order No.
80 ▲	94.5	114.5	53			X		5-80mm			1	CAPTIS-80-53-RG / D3*
80 ▲	94.5	114.5	53				X	20.40. 60mm			1	CAPTIS-80-53-WG / D3*

Clamping of unmachined parts with extension

Size	D1	D2	L1	LQ	Q	G	W	Round	Hexagon	Square	Raising	Order No.
100 ▲	121	144.5	59	X				42-100mm			1	CAPTIS-100-59-RLQ / D3*
100 ▲	121	144.5	59		X				50-86mm		1	CAPTIS-100-59-SQ / D3*
100 ▲	121	144.5	59		X					50-70mm	1	CAPTIS-100-59-VQ / D3*

Clamping of machined parts without extension

Size	D1	D2	L1	LQ	Q	G	W	Round	Hexagon	Square	Raising	Order No.
100 ▲	121	144.5	59			X		42-100mm			1	CAPTIS-100-59-RG / D3*
100 ▲	121	144.5	59				X	45.65. 90mm			1	CAPTIS-100-59-WG / D3*

Clamping of unmachined parts with extension

Size	D1	D2	L1	LQ	Q	G	W	Round	Hexagon	Square	Raising	Order No.
120 ▲	141.8	180	61	X				62-120mm			1	CAPTIS-120-61-RLQ / D3*
120 ▲	141.8	180	61		X				50-104mm		1	CAPTIS-120-61-SQ / D3*
120 ▲	141.8	180	61		X					50-85mm	1	CAPTIS-120-61-VQ / D3*

Clamping of machined parts without extension

Size	D1	D2	L1	LQ	Q	G	W	Round	Hexagon	Square	Raising	Order No.
120 ▲	141.8	180	61			X		62-120mm			1	CAPTIS-120-61-RG/ D3*
120 ▲	141.8	180	61				X	65.90.110mm			1	CAPTIS-120-61-WG / D3*

G): Smooth	from 4-7 mm smooth
(LQ): Longitudinal and transverse groovesrillen	from 8-10 mm with trans. grooves
(Q): Transverse grooves	caused by production
(W): Soft	

* Please specify clamping diameters D3 in the order, valid for collet chucks type LQ + Q

▲ on request

Akkermans Industrial Engineering B.V. info@aiebv.com T +31 (0)165 - 224140

CLAMPING DEVICE

Clamping device for CAPTIS collets, manual

Size	32	42
Clamping device manual	**1283285**	**1283286**
Suitable for	Round	Round
Weight kg	1	1.1

Clamping device for CAPTIS collets, manual

Size	52	65	80
Clamping device manual	**1283287**	**1283288**	**1283289**
Suitable for	Round	Round	Round
Weight kg	1.1	1.2	1.3

Clamping device for CAPTIS collets, pneumatic

Size	80	100
Clamping device pneumatic	**1362635**	**1362636**
Suitable for	Round	Round
Weight kg	2.5	2.8

Clamping device for CAPTIS collets. pneumatic, 2 hand actuation

Size	120
Clamping device pneumatic (2 hand actuation)	**1362637 ▲**
Suitable for	Round
Weight kg	3

▲ on request

RÖHM GmbH
Heinrich-Röhm-Strasse 50
89567 Sontheim/Brenz
Germany
Phone +49 7325 16 0
Fax +49 7325 16 510
info@roehm.biz
www.roehm.biz

driven by technology

Id.-Nr. 1242367 / 1023